ANTRIEBSTECHNIK
tae

BRUSHLESS NEODYMIUM MAGNET MOTORS

Installation, operating and maintenance instructions

Series BL-N-71 to BL-N-180

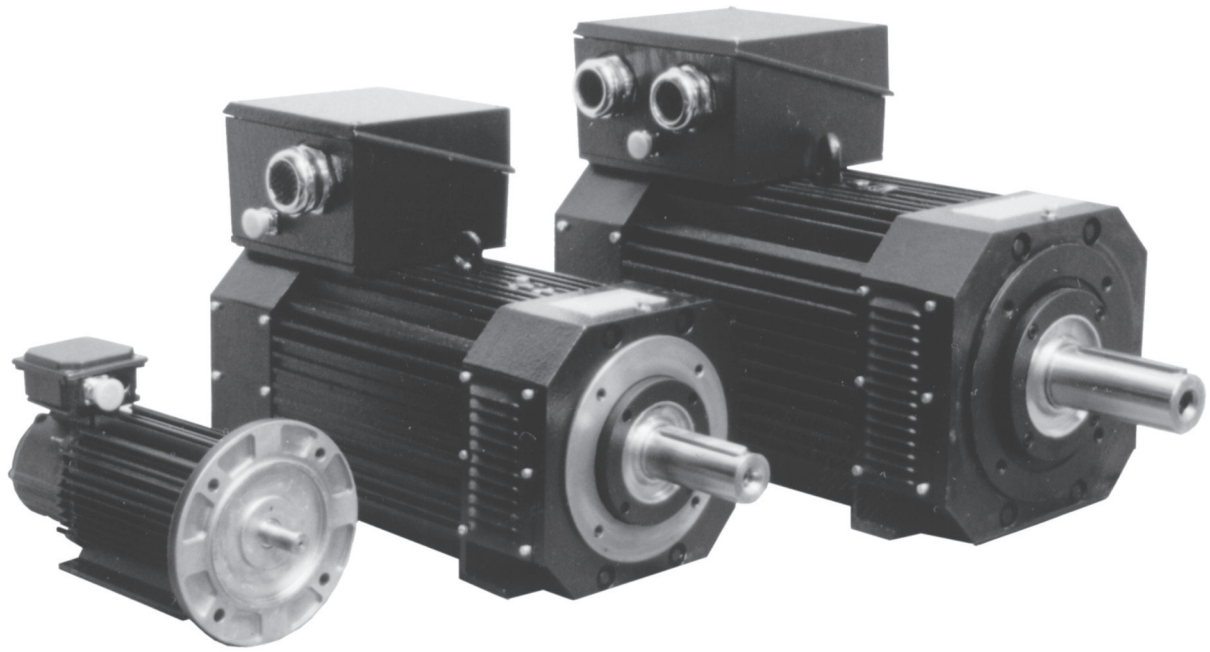

Pikatron GmbH • division TAE Antriebstechnik • Raiffeisenstrasse 10 • D-61250 Usingen

State 18.12.2019 V-2 EBL-N-Install.indd

Table of contents

1.0 Checklist 4
- 1.1 Delivery 4
- 1.2 Storage 4
- 1.3 Handling 4
- 1.4 Place of use 4
- 1.5 Alignment 5
- 1.6 Installation 5
- 1.7 Checking 5
- 1.8 Inspection 5

2.0 Servicing work 5
- 2.1 Vibration 5
- 2.2 Development of noise 5
- 2.3 Motor temperature 6
- 2.4 Cooling devices 6
- 2.5 Bearings 6
  - 2.5.1 Bearing lubrication intervals and Grease quantity 6
  - 2.5.2 Permissible radial loads 7
- 2.6 Position and speed encoders 8
- 2.7 External pulse encoder 8

3.0 Electrical connections 8
- 3.1 Laying of cables 8
- 3.2 Earthing conditions 8
- 3.3 Power connections 9
- 3.4 Pin-outs of the position and pulse encoders 10
  - 3.4.1 Pin-outs of resolver 10
- 3.5 Connections for thermal monitoring 10
  - 3.5.1 Connection variant 1 (standard) 11
  - 3.5.2 Connection variant 2 (special configuration) 11
  - 3.5.3 Connection variant 3 (PT100) 11
- 3.6 Connections for fan 11

4.0 Maintenance and repair 12
- 4.1 Dismantling and assembling BL-N-71 to BL-N-100 motors 13
  - 4.1.1 Dismantling the drive end 13
  - 4.1.2 Dismantling the encoder end 13
  - 4.1.3 Dismantling the terminal box BL-N-71 to BL-N-100 13
  - 4.1.4 Assembling the motors BL-N-71 to BL-N-100 14
- 4.2 Dismantling the motors BL-N-112 to BL-N-180 14
  - 4.2.1 Dismantling the drive end 14
  - 4.2.2 Dismantling the encoder end 14
  - 4.2.3 Dismantling the rotor 15
  - 4.2.4 Dismantling the terminal box 15
  - 4.2.5 Assembly of motors BL-N-112 to BL-N-180 15

We assume no responsibility for printing errors and reserve the right to make technical changes or improvements at any time.

5.0 Adjustment of the position encoder 16
5.1 Adjustment of the encoder with TA-BL & TA-BL/P 16
5.2 Adjustment of the encoder with U-Drive 16
6.0 Troubleshooting 17
7.0 Types of motor protection and cooling 20
8.0 Types of construction 23
9.0 Type plate 24
10.0 General drawings and spare parts lists 25
10.1 General drawing and spare parts list BL-N-71 to BL-N-100 25
10.2 General drawing and spare parts list BL-N-112 to BL-N-180 26

Motor - Article - Key

Basic-Article Number / Frame Size — **Design / Options**

87103 - P B D A F 0 1

Winding Type
C = 60V ±5% Buss 325V
D = 70V ±5% Buss 325V
I = 250V ±10%
J = 225V ±10%
K = 200V ±10%
L = 170V ±10%
M = 160V ±10%
N = 145V ±10%
O = 125V ±10%
P = 105V ±10%
Q = 90V ±10%
R = 75V ±10%
S = 65V ±10%
T = 50V ±10%
U = 40V ±10%
V = 30V ±10%
W = 20V ±10%
X = 10V ±10%

Type of Protection / Cooling
A = DPFG / Drip Proof, Fully Guarded
B = DPBV / Drip Proof, Blower Ventilated
C = DPNV / Drip Proof, Non-Ventilated
D = TENV / Totally Enclosed, Non-Ventilated
E = TEFC / Totally Enclosed, Fan Cooled
F = TEAO / Totally Enclosed, Air Over
G = TENV / Totally Enclosed, Non-Ventilated
H = TEFC / Totally Enclosed, Fan Cooled
I = TEAO / Totally Enclosed, Air Over
K = TENV / Totally Enclosed, Non-Ventilated
L = TEFC / Totally Enclosed, Fan Cooled
M = TEAO / Totally Enclosed, Air Over
N = TENV / Totally Enclosed, Non-Ventilated
O = TEFC / Totally Enclosed, Fan Cooled
P = TEAO / Totally Enclosed, Air Over
Q = TENV / Totally Enclosed, Non-Ventilated
W = ICW / Totally Enclosed, Water cooled

Current Sales Number

Shaft Encoder End
A = Without shaft
B = Fan wheel and cover
C = Shaft long type
D = Shaft Servo encoder HG 610
E = Shaft Servo encoder and fan wheel
F = Shaft with centering for extension Servo encoder
G = Shaft brake
K = Shaft brake and Servo encoder
M = Shaft Servo encoder F18
N = Shaft Servo encoder CDD50
R = Shaft resolver
Z = Sensorless

Shaft Drive End
A = Standard
B = Special shaft ø24 with fitting key (BL-N-71...90)
C = Special shaft ø24 non surge shaft (BL-N-71...90)
D = Special shaft ø19 non surge shaft (BL-N-71...90)
F = Special shaft ø14 non surge shaft (BL-N-71)
E = Special shaft

Construction & Bearing
A = B3 / Ball bearings drive- and shaft-end (B3/B14 at BL-N 71...90)
B = B5 / Ball bearings drive- and shaft-end
C = B14 / Ball bearings drive- and shaft-end
D = B3 / roller bearings drive end, ball bearings shaft end
G = B3 / B5 special flange
H = B5 square flange
I = B14 special flange
K = B5 square flange, B3 prepared with 4x thread in the Base, Ball bearings drive- and shaft-end
L = B5 special flange, Ball bearings drive- and shaft-end

Example:
Winding type: **P 105V,** Type of protection / Coolinf: **DPBV,** Construction & Bearing: **B3 roller bearing drive end and ball bearing encoder end,** Shaft drive end: **Standard,** Shaft encoder end: **Shaft with centering for extension Servo encoder,** Current sales number: **01**

We assume no responsibility for printing errors and reserve the right to make technical changes or improvements at any time.

Warning!
There are inherent risks in handling electrical machines and rotating equipment. Setting-up and servicing may only be done by trained personnel.

1.0 Checklist

1.1 Delivery

All the motors leave our factory after comprehensive testing and are in perfect condition and in suitable packaging for transport. On receipt, please check each motor for any mechanical or electrical damage that could have been caused in transport. Please report any such damage at once and first of all to the shipping company that supplied the goods. If you require any help in assessing the damage or determining the cost of the damage please contact us or our representatives directly.

1.2 Storage

The motors should be stored in clean and dry rooms that are protected against extreme variations in temperature. It is necessary to rotate the shaft once a month to prevent depositions of bearing grease. We recommend that the grease should be changed if the motor is stored for more than 6 months.

1.3 Handling

Protect the motor against knocks and impacts! Remove the protective agent against rust applied to the shaft with a suitable solvent before the actual installation.

1.4 Place of use

The motor should be installed corresponding to its type of insulation. The maximum ambient temperature of 40°C should not be exceeded. The motor rating must be correspondingly reduced for heights over 1000 m above sea level or if exceeding the ambient temperature of 40°C.

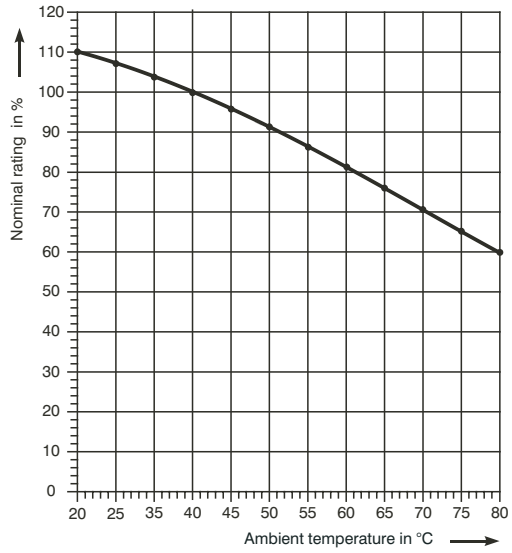

At Cooling type IC01, IC06 and IC17:
Air humidity 20 °C ≙ 95% max.
Air humidity 40 °C ≙ 50% max.

Tropical conditions must be extra indicated by order, Surface finishing of winding and construction parts.

External blower: filter quality 650 g/m²

Height above sea level	2000 m	3000 m	4000 m
Faktor	0,94	0,87	0,77

The power correspondingly reduces by multiplying the factor with nominal rating.

Example: The rating of a brushless motor with 100 kW has to be recalculated for an ambient temperature of 65°C. From the diagram this produces a rating of 76 % for 65°C, which is:

$$kW\ (65°C) = \frac{76\%}{100\%}\ kW\ (40°C)$$

$$= 0{,}76 \times 100 = 76kW$$

We assume no responsibility for printing errors and reserve the right to make technical changes or improvements at any time.

1.5 Alignment

Precise alignment of the motor when it is directly coupled to the shaft is of major importance. Inaccuracies can lead to damage that can destroy the bearings and the rotor of the motor as well as the connected machine parts.

1.6 Installation

The motor can be installed in any shaft position as long as the radial and impact loads remain within specified limits. A rigid foundation is only necessary for motors with pedestal installation. The pedestal, bearings and motor body shold be subjected to the minimum possible loadings during installation.
The body of the motor can attain high temperatures (up to 100°C). For that reason you should keep inflammable materials well away from the motor.

1.7 Checking

Before installation of the motor, ensure that all the rotating parts of the machine are at an adequate distance from stationary parts. If possible move the machine manually to determine any mechanical interference in advance. It is necessary to ensure that all the bolts and nuts required to attach the motor have been done up tight.



Attention ! Do not run Motors with Roller Bearings without belt tension.
At to low load for example at high speed in a test run, a slip could happen in the bearings by insufficient lubrication which could damage the bearings.
As minimum load for Roller bearings 2% of dynamic basic load rating is recommend.
(refer to chapter 2.5.2 table 1 permissible radial forces)

The machine can be damaged if the motor rotates in the wrong direction. Check the direction of rotation of the motor before connecting the motor to the machine.
The electrical connection should be made after the installation and setting-up work. The connection diagram can be taken from this description. During the initial commissioning of the motor the motor current should be monitored and the rated data compared with the type plate.

1.8 Inspection

The motor should be subjected to regular inspections. It is necessary to make a first check a few hours after initial commissioning in order to prevent any errors (caused by the installation). Subsequent inspections should be carried out in intervals of about a month. Regularly check at shorter intervals that the installation devices are firmly attached, check for vibration, the development of noise (a constant humming is normal) and the temperature.

2.0 Servicing work

2.1 Vibration

Check for signs of excessive vibration. The causes for this could be: A motor that is not aligned accurately, has not be properly balanced or loose couplings and pulleys, defective motor bearings, loose retaining bolts in the motor or on the installation devices. Strong vibrations can produce defects in the bearings of the motor, in the shaft, in the holding devices and in the machine itself.

2.2 Development of noise

It is necessary to monitor the entire background noise, especially in the area of the brackets. Rumbling or scraping noises indicate internal defects. A constant high humming with short breaks in a no-load condition is normal for a brushless DC motor. It is necessary to check the settings of the regulator if buzzing or an uneven humming occurs in the area above 20 rpm.

We assume no responsibility for printing errors and reserve the right to make technical changes or improvements at any time.

2.3 Motor temperature

Motors of types of protection and cooling IP23 with IC 01/IC 06 and IP54 with IC 416 can reach surface temperatures of up to 85°C. Motors of types of protection IP54 with IC 410/IC 411 can reach temperatures of up to 100°C. Determine the loading of the motor before checking the motor temperature.



Warning!

Danger of burns!

Never determine the motor temperature with bare hands!

Use suitable means of measurement to determine the temperature. If the measured temperature seems to be too high, the cooling devices and the motor current should be checked.

2.4 Cooling devices

The fans built into outside-ventilated motors require only a small amount of maintenance. The bearings of the fan motors have an operating life of 15,000 to 40,000 hours. The air filters and fan wheel should be maintained regularly:

- Direction of rotation of the fan wheel should be such that the air flows from the outside into the filter.
- Air filters should be cleaned or replaced at regular intervals dependent on the degree of dirtiness.
- Before installing a new air filter, ensure that the fan wheel can turn freely and that there are no major deposits of dirt on it.

2.5 Bearings

The motors of the BL-N-71 and BL-N-100 series have single-row, deep groove ball bearings lubricated for life which need to be changed after five years at the latest. They need no maintenance apart from regular monitoring of the running noise and vibration. Replace any defective bearings at once!

2.5.1 Bearing lubrication intervals and Grease quantity

The motors of the BL-N-112 series onwards are provided with deep groove ball bearings or, on request, with roller bearings on the drive side. Roller bearings need to be provided with new grease under normal operating conditions at intervals of 2,400 operating hours (related to a rotating speed of 2200 rpm). A suitable grease is ISOFLEX NCA 15. Company Klüber (www.klueber.com). Technical data of the grease refer to the last page of this manual. Grease quantity for re-filling, see chart enclosed. Grease quantity for first filling of the ball bearings is approximately triple of grease for re-filling.

Grease quantity for re-filling of Rollerbearings

Motor type	Roller Bearing	Grease quantity [g]
BL-N-112	NU 308 ECP	10
BL-N-132	NU 310 ECP	15
BL-N-160	NU 313 ECP	23
BL-N-180	NU 315 ECP	30

Suitability grease: ISOFLEX NCA 15 (Manufacture Klüber)

We assume no responsibility for printing errors and reserve the right to make technical changes or improvements at any time.

2.5.2 Permissible radial loads

The maximum radial loading of the drive shaft is derived from the life of the bearings used, the point at which the forces apply to the shaft and the operational speed of the motor. The radial forces given in the table (F_R) relate to the middle of the line of application E, whereby dimension E corresponds to the length of our standard shafts. (See Fig. 1, Point of application of force F_R and Table 1, Permissible radial loads).

All details only relate to the normal A-side shaft end of B3 type. Any axial forces that arise and which lead to a reduction of the permissible radial loads as a result are not taken into consideration in the calculations but can be notified to you on request.

As standard, motors of the BL-N-71 to BL-N-160 series are provided with deep groove ball bearings. On the A side the motors have a movable bearing with set zigzag spring ring and a fixed bearing on the B side. On request, the A side can also be provided with cylindrical roller bearings in the event of high radial loads to pulley or pinion operation, etc.

Fig. 1 -
Application point of force F_R

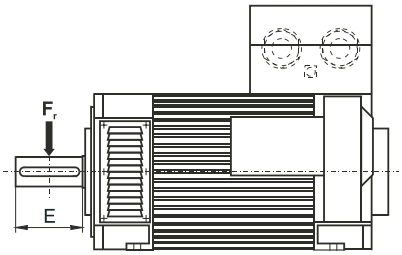

Table 1 - Permissible radial forces [N]

Motor type	Deep groove ball bearings Drive End (standard)			Ball bearings Encoder End	Roller bearings Drive End (on request)		
	Bearing		Permissible radial force F_r in N at 2000 min^{-1}		Bearing		Permissible radial force F_r in N at 2000 min^{-1}
	Description	Dynamic Basic Load Rating in N		Description	Description	Dynamic Basic Load Rating in N	
BL-N-71 A	SKF 6005-2Z	11200	639	SKF 6005-2Z	NU 1005	14200	797
BL-N-71 B			667				832
BL-N-71 C			688				859
BL-N-71 D			704				879
BL-N-90 A	SKF 6306-2Z	28100	1672	SKF 6005-2Z	NU 306 EC	51200	3000
BL-N-90 B			1711				3069
BL-N-90 C			1743				3127
BL-N-90 D			1770				3167
BL-N-112 A	6308-2RS1	41000	2500	6307-2RS1	NU 308 EC	80900	4960
BL-N-112 B			2620				5160
BL-N-112 C			2820				5500
BL-N-112 D			3230				6200
BL-N-132 A	6310-2RS1	61800	3670	6309-2RS1	NU 310 EC	110000	6500
BL-N-132 B			3820				6780
BL-N-132 C			4010				7150
BL-N-132 D			4390				7900
BL-N-160 A	6313-2RS1	92300	5410	6312-2RS1	NU 313 EC	183000	10720
BL-N-160 B			5580				11100
BL-N-160 C			5790				11560
BL-N-160 D			6090				12250
BL-N-180 A	6315-2RS1	114000	6950	6313-2RS1	NU 315 EC	242000	14900
BL-N-180 B			7110				15310
BL-N-180 C			7300				15830
BL-N-180 D			7580				16610
BL-N-250 A	6318-2RS1	143000		6315-2RS1	NU 318 EC	319000	
BL-N-250 B							
BL-N-250 C							
BL-N-250 D			8540				14480
	Bearing life 20 000 h				Bearing life 50 000 h		

We assume no responsibility for printing errors and reserve the right to make technical changes or improvements at any time.

2.6 Position and speed encoders

The internally installed position and speed encoders are adjusted once and are thereafter maintenance-free.

2.7 External pulse encoder

If the motor is equipped with an external pulse encoder (for servo drive units), the coupling and the attachment device of the pulse encoder must be checked regularly to ensure that it is firmly located.

3.0 Electrical connections

3.1 Laying of cables

When installing the power supply cables for the motor, the cable connections should be made over as wide an area as possible. Single-core types of conductors with simple clamp connections should be avoided. In this case it is best to use fine-wire cables with crimp connections.

The motor cables, mains supply cables and the control cables are to be laid as separate cable runs. In general, the digital and analog cores for set and actual value (motor control cables) are to be laid in screened form. The main cause of errors relating to the cable-related or EMC problems is the cable connection between the regulator and the motor. The cable connection should be screened, but note when doing this that the cable routes should be kept as short as possible in any case.

Fig. 2 -
Laying cables

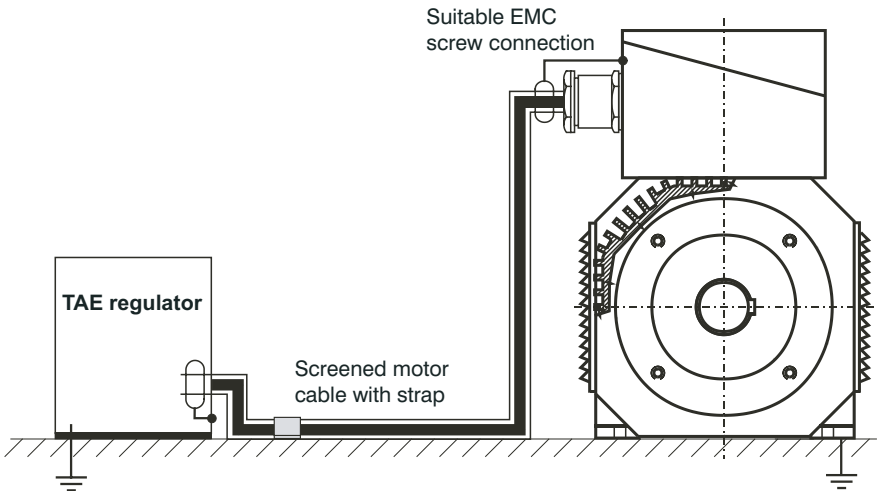

3.2 Earthing conditions

All metallic conductive casings are to be earthed with suitable cables. Ensure that the voltages are equalised properly. The corresponding minimum cross-sections are stipulated for the area in the safety regulations relating to errors at 50Hz. It is essential to comply with this!

All the earthing cables are to be kept as short as possible. The screening must be arranged radially and over a large area. Avoid lengthening the screening with a cable. The screen must protrude into the terminal box or into the casing of the connected operating media. It is possible to use the cable screw connection to attach the screen at the motor. The screen is to be drawn over the screw connection and fastened with a strap.

We assume no responsibility for printing errors and reserve the right to make technical changes or improvements at any time.

3.3 Power connections

Warning!
The motor may never be connected directly to the mains!
In that case the motor will be demagnetised at once and the coil is destroyed.

The connections of the motors and the regulators must be marked with U, V and W and must be switched according to the letters, thus U with U, V with V and W with W. If U, V or W are connected wrongly, the drive system will not function.

It is very important to install an earthing line between the motor and the regulator.

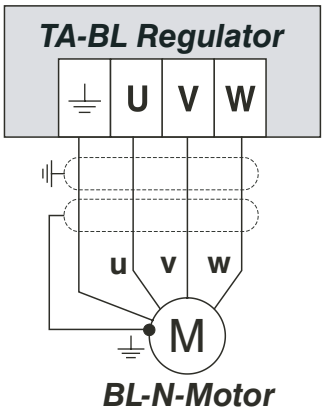

Nut torque: Connections at Terminal Board				
M6	M8	M10	M12	M16
5 Nm	11 Nm	22 Nm	37 Nm	80 Nm

Warning!
It is essential to ensure that the regulator and the motor are properly earthed. Otherwise there is the risk that both components will be damaged.

Terminal box

BL-N-71 to BL-N-100

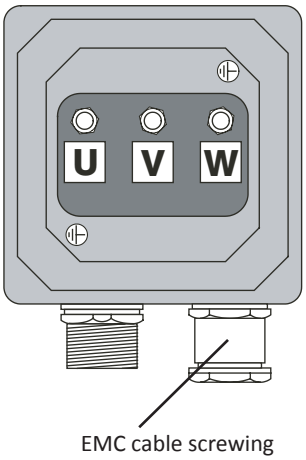

BL-N-112 to BL-N-180

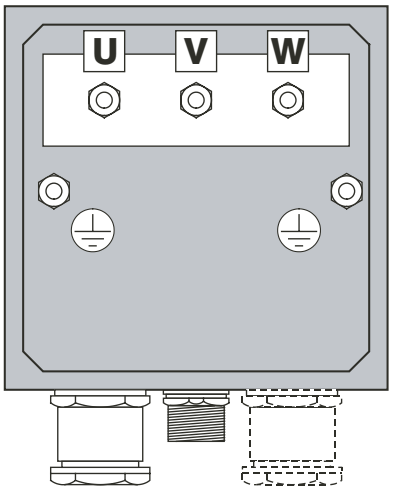

From BL-N-200 onwards

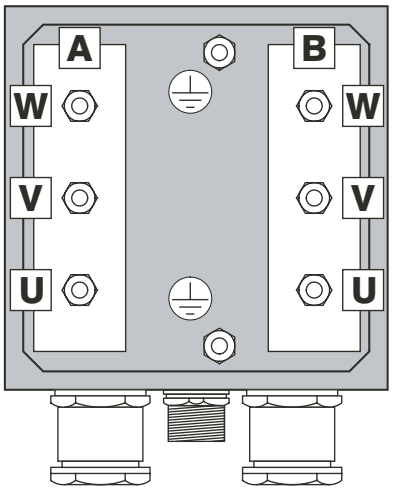

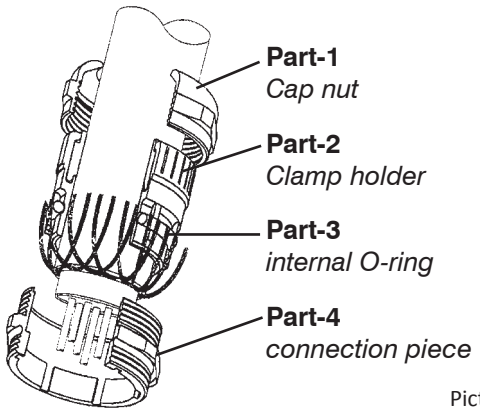

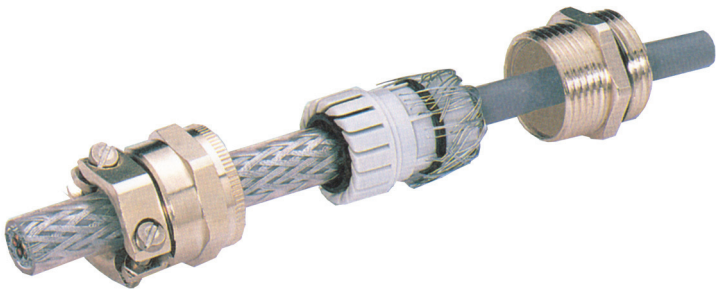

Picture suitable EMC screw connection of the Motor cable

3.4 Pin-outs of the position and pulse encoders

Fig. - Pin-outs of socket (Pins) at terminal box (view from the soldering side)

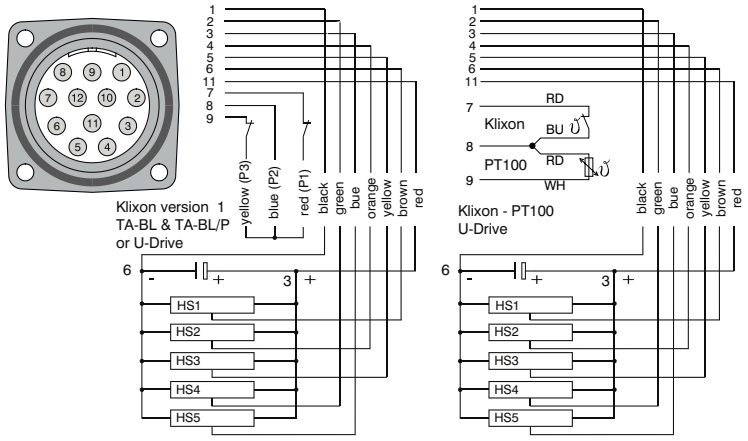

Pin	Colour	Description
1	BK	earth 0V
2	GN	Speed sensor (HS4)
3	BU	Speed sensor (HS5)
4	OG	Position sensor (HS2)
5	YE	Position sensor (HS3)
6	BN	Position sensor (HS1)
7	RD	Thermal switch to switch-off
8	BU/RD	Common connection
9	YE/WH	Thermal switch or PT100 for pre-warning
10	-	Reserve
11	RD	+5 Volt
12	-	Reserve

Maximum contact loading 48VDC/500mA or 48VAC/100mA

The cable (sensor cable) to the position and pulse encoders must be screened. In addition to the seven cores of the encoder there are three additional cores in the sensor cable to assess the thermal protective switching of the motor. A sensor cable is connected to the motor via a 12-pin plug at the motor terminal box.

The pin-outs of the connection at the regulator can be taken from the corresponding operating instructions. It is essential to ensure that the earthing is done correctly. The screen of the sensor cable is to be connected to the regulator.

3.4.1 Pin-outs of resolver

Fig. - Pin-outs of socket (Pins) at terminal box (view from the soldering side)

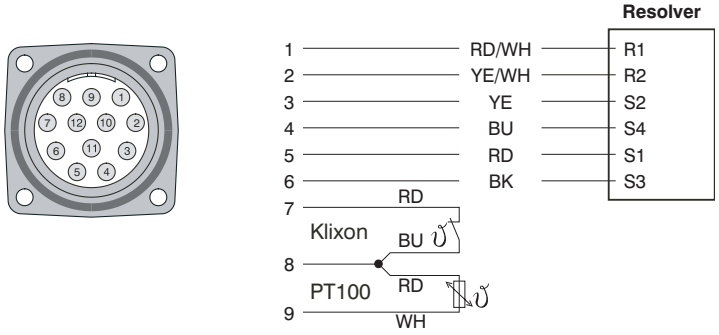

3.5 Connections for thermal monitoring

Evaluation of the thermal monitoring is absolutely essential for the safe operation of the drive unit. Incorrect use of the thermal switch can cause the motor to be destroyed.
The thermal monitoring of brushless DC motors consists thermal switches and temperature evulation PT100.

- Switching temperature of the thermal switch

Motoren type	Pre-warning temperature		Switch-off temperature	
Enclosure	IP23	IP44/54	IP23	IP44/54
BL-N-71...100	-	120°C	-	130°C
BL-N-112...180	160°C	150°C	170°C	160°C

The thermal monitoring of brushless DC motors works better than for conventional DC motors. The reason for this is that the thermal switch is located directly in the stator coil. It is there located at the very point where most of the heat is generated.

We assume no responsibility for printing errors and reserve the right to make technical changes or improvements at any time.

3.5.1 **Connection variant 1** (standard)

The connections for the thermal switches are laid onto the 12-pin plug at the motor terminal box and are connected to the regulator with the sensor cable. The exact pin-outs can be found at Item 3.4 above. The maximum loading of the plug and at the terminals at the regulator is 48VDC/500mA or 48VAC/100mA.

3.5.2 **Connection variant 2** (special configuration)

If 230VAC is required at the Klixon connection, the Klixon must be placed on the terminals in the motor terminal box and wired separately with suitable cable.

Terminal P1 = Switching-off
Terminal P2 = Joint Klixon connection
Terminal P3 = Pre-warning
Switching temperature see Item 3.5 above.

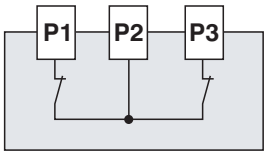

Maximum contact loading 250V/1A

3.5.3 **Connection variant 3** (PT100)

If a temperature evulation with PT100 is required, the connection is placed on terminals in the motor terminal box and wired separately with suitable cable.

Connection U-Drive

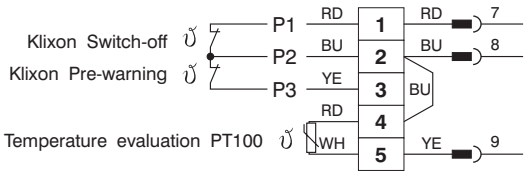

Connection TA-BL & TA-BL/P

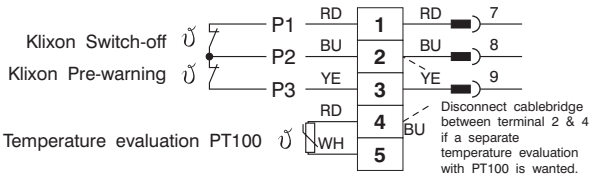

3.6 Connections for fan

Motors with cooling types IC 06 and IC 416 are cooled with outside fans. The connections are done in a separate terminal box at the fan motor. The fans must meet the following specifications:

Motoren type	Volume flow in m^3/h		Pressure in Pa	
Cooling	IC06 (DPBV)	IC 416 (TEAO)	IC06 (DPBV)	IC 416 (TEAO)
BL-N-71	-	90	-	
BL-N-90	-	290	-	
BL-N-112	360	480	500	
BL-N-132	660	600	620	
BL-N-160	1080	1130	760	
BL-N-180A	1470	1549	1040	
BL-N-180B-D	1800	1549	1550	

Please note the nominal voltages and type the switching given on the type plate when connecting the fan. The fan motors must be provided with over-current protection devices as per the VDE stipulations.

Warning! Please note the following points during initial commissioning:

1. Any protective arrangements used (Klixons) affect overheating.
2. Any outside fans that are installed must have the right direction of rotation (arrow on casing).
3. The cooling air must be able to flow in and out freely.
4. Installation of the covering plates for type of protection IP 23 must be done correctly. The plates must point downwards (see illustration „Type of protection IP23, type of cooling IC 01“, page 21).

We assume no responsibility for printing errors and reserve the right to make technical changes or improvements at any time.

4.0 Maintenance and repair

Brushless DC motors can be overhauled by competent specialist motor workshops for electrical drive units. Special points to be noted are the handling of the neodymium magnet rotor and the pulse encoder.



Warning!

Do not work with a wristwatch in the vicinity of the rotor when dismantling (high magnetic forces).

Rotor:

The neodymium magnets of the rotor cannot be demagnetised under normal conditions. It is necessary to handle the rotor with the greatest possible care since the neodymium magnets have a very strong magnetic field, are as hard as ceramic, and can break easily.

Pulse encoders:

The pulse encoder consists of two parts: An encoder rotor on the motor shaft and an encoder PCB attached to the encoder end bracket of the motor. The two parts must be aligned exactly to provide optimum operation of the motor.

Bearings:

The bearings are pulled onto the motor shaft. The bearing of the encoder end (fixed bearing) is fixed by a bearing cover. On the drive end the bearing (movable bearing) is pressed into the bracket with a spring disk.

We assume no responsibility for printing errors and reserve the right to make technical changes or improvements at any time.

4.1 Dismantling and assembling BL-N-71 to BL-N-100 motors

Please note the drawing in section 10.1 below. However, not all the details can be shown in this general drawing.

4.1.1 Dismantling the drive end

1. First of all dismantle the feather key (3) on the motor shaft so that it is not damaged.
2. Undo the 4 hexagonal screws so that the 4 spring rings and 4 tie bolts (16) can be removed from the drive end bracket (5).
3. The drive end bracket (5) and the spring disk (14) can only be pushed in the axial direction out of the stator fit (4) or from the shaft (9). The bearing (7) remains on the motor shaft.
4. The drive end bracket can now be pulled off with a pulling tool.

4.1.2 Dismantling the encoder end

1. First of all dismantle the 4 screws, that fix the cover of the encoder end bracket (22). The cover can then be pushed out of the fit in the axial direction.
2. After undoing the 2 set screws in the encoder rotor (20), pull out the rotor in the axial direction from the shaft.
3. Undo the plug (1) from the terminal box (10) (see Section Dismantling the terminal box).
4. In order to dismantle the encoder PCB (21), the 2 screws attaching the PCB to the encoder end bracket must be undone. The PCB can now be drawn out completely with the connecting cable through the encoder end bracket (6).
5. Remove the Seeger circlip ring (19) with pliers from the shaft.
6. Now the entire shaft can be drawn out in the axial direction. This is best done by using a press, since the encoder end bearing (8) remains firmly seated in the encoder end bracket (6). In order to prevent the magnet holder from being damaged, the shaft should only be pushed so far to the stator until the shaft comes out of the bearing (see Fig. 1). Once the shaft has been pushed out of the bearing, it can be drawn out of the stator in the axial direction. It is necessary to ensure when doing this that the shaft does not come in the vicinity of magnetic materials!
7. Dismantle the connecting cable from the terminal board (15).
8. The encoder end bracket can now be drawn out of the stator fit in the axial direction.
9. Remove the Seeger circlip ring (17) from the bracket with pliers.
10. Pull out the B bearing from the bracket with a pulling tool.

Fig 1

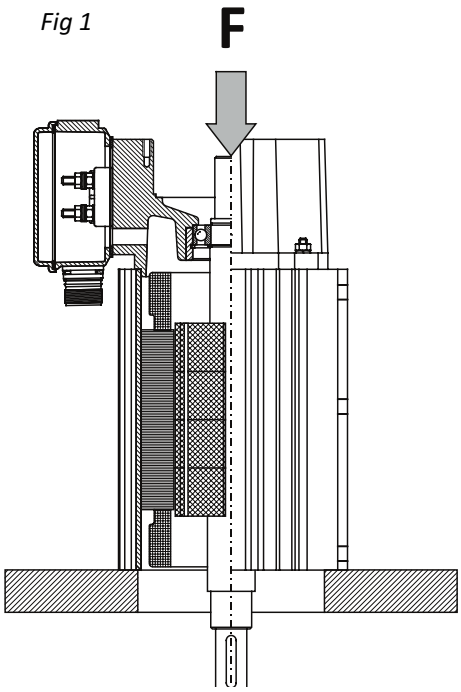

4.1.3 Dismantling the terminal box BL-N-71 to BL-N-100

1. Undo the 4 screws and remove the terminal box cover (18). This applies for any work to be done within the terminal box (17).
2. Undo the nuts and cables with the cable lug at the terminal board (15).
3. Dismantling the built-in socket is only possible with a special tool (No. FC6EB002100X, available from us). Push the dismantling tool from the outside into the casing of the socket. Undo the insulated body by turning it to the left and lightly pressing. Undo the signal leadthroughs (from the temperature encoders from the speed and position encoders) by pushing out the individual pins from the insulated body of the built-in socket (1).
4. Remove the 4 screws that hold the terminal box to the encoder end bracket. Now you can remove the terminal box from the bracket. Ensure when doing this that the seal between the terminal box and the bracket is not damaged.

We assume no responsibility for printing errors and reserve the right to make technical changes or improvements at any time.

4.1.4 Assembling the motors BL-N-71 to BL-N-100

Assembly of the motors is done in the reverse order to dismantling the motors.

4.2 Dismantling the motors BL-N-112 to BL-N-180

Please note the exploded diagram in section 10.2. However, not all the details can be shown in this general drawing.

4.2.1 Dismantling the drive end

1. Remove the feather keys (22) from the motor shaft with the aid of the separating thread.
2. Undo the set screw (29) and pull the oil spray disk (10) off the shaft in the axial direction.
3. Remove the 12 screws (41) and the 2 louvered covers (covers with ventilation slots). This makes the way free to the screw connection that connects the drive end bracket (4) with the casing together with the stator coil (2).
4. Remove the 4 hexagonal screws (30) and 4 hexagonal screws (32). This undoes the mechanical connection of the bracket to the casing. The drive end bracket (4) including the A bearing can be removed from the motor shaft in the axial direction.
5. Remove the 4 Allen screws (35) and then dismantle the outer bearing cover (7), spring disk (25), inner bearing cover (6) and if there is a roller bearing (23), also the spacer ring (11).
6. It is possible to push out the roller bearings or ball bearings (23) from the drive end bracket (4) in the axial direction and in this case the roller bearing without the inner ring and the complete ball bearing. The inner ring of the roller bearing remains in the motor shaft and can be drawn out with the help of a puller. (Note: If the ball bearing is used, no spacer ring (11) is installed.)

4.2.2 Dismantling the encoder end

1. First it is necessary to have access to the encoders (27) - speed and position encoders: After undoing the 4 recessed screws with the slot (43), remove the cover (12). Check the position marking of the encoder (27) and for the encoder PCB in the outer bearing cover (9) and the encoder rotor in the motor shaft. If the bearing marking is not clear enough, it needs to be replaced.
2. Push out the encoder rotor off the shaft in the axial direction after undoing the 2 set screws.
3. Remove the encoder PCB after removing the 4 Allen screws (36).
4. Push out the shaft locking ring (26) from the shaft groove with the aid of suitable pliers.
5. Remove the side cover after removing the 6 machine screws with slot (42).
6. Next remove the 4 recessed screws (44) and the ventilation intermediate piece. After subsequent dismantling of the terminal box (separate section: Dismantling the terminal box), access is possible to the screws that hold the encoder end bracket (5) to the casing together with the stator coil (2).
7. Remove the 2 hexagonal screws (31) and the 6 hexagonal screws (33). This releases the mechanical connection of the bracket to the casing.
8. Dismantle the encoder end bracket (5) including the B bearing in the axial direction from the motor shaft.
9. After removing the 4 Allen screws (37) it is possible to dismantle the outer bearing cover (9). Dismantling of the inner bearing cover (8) is possible after removing the 4 Allen screws (38).
10. Push out the ball bearing (24) in the axial direction.

Note: Since this procedure is relatively complicated for bearing replacement (24), we attempt to replace the bearings (24) without dismantling the encoder end bracket (5) with the aid of special tools.

We assume no responsibility for printing errors and reserve the right to make technical changes or improvements at any time.

4.2.3 Dismantling the rotor



Warning!

The rotor can only be drawn out by a special tool!
Risk of being crushed or injured due to the high magnetic forces.

If it is necessary to dismantle the rotor (1), this requires special tools to be used (a roller with an external diameter that corresponds to the bearing on the encoder end of the motor (the roller is screwed in with its threaded bolt into the thread of the facing side of the shaft of the motor on the encoder end)).

1. Dismantle the Drive end bracket (4).
2. Push out the rotor (1) from the stator in the direction of the drive end of the motor. Since the special device is fixed into the hub of the encoder end bracket (5), the device centres the rotor in the stator hole.

4.2.4 Dismantling the terminal box

1. Undo the 2 Allen screws (39) and 2 Allen screws (40) and remove the terminal box cover (18). This applies for all work done inside the terminal box (17).
2. Undo to U-V-W connections by unscrewing the nuts. Remove the terminal board (3).
3. Dismantling the built-in socket is only possible with a special tool (No. FC6EB002100X, available from us). Push the dismantling tool from the outside into the casing of the socket. Undo the insulated body by turning it to the left and lightly pressing. Undo the signal leadthroughs (from the temperature encoders from the speed and position encoders) by pushing out the individual pins from the insulated body of the built-in socket (1).
4. Remove the 2 shim plates (21) after removing the recessed screws with slot (45), and push out the high power current leadthrough (19) and signal leadthrough (20) from the terminal intermediate piece (16). The machine leadthroughs are now free.
5. Pull in the machine leadthroughs into the internal area of the encoder end bracket (5).
6. Remove the 4 hexagonal screws (34) and remove the terminal box (17).
7. Remove the terminal intermediate piece (16) after removing the 4 recessed screws with slots (46).

4.2.5 Assembly of motors BL-N-112 to BL-N-180

Assembly of the motors is done in the reverse order of dismantling.

5.0 Adjustment of the position encoder

5.1 Adjustment of the encoder with TA-BL & TA-BL/P

If it is necessary to dismantle the encoder, before dismantling it mark the position of the encoder rotor with respect to the motor shaft and the position of the encoder PCB to the bracket. When the motor is dismantled, the encoder must be installed such that it lines up with the magnets of the rotor as well as the windings in the stator.

If the encoder is to be replaced or the stator is to have new windings, it is necessary to recalibrate the position encoder.

1. Connect the motor to the regulator according to the operating instructions. Before switching it on, reduce the current limits for 1Q with parameter *1/07* (current limit potentiometer VR4) *) and 4Q operation with parameter *1/09* (current limit potentiometer VR3) *) to the minimum current. Remove the cores 26 (17), 27 (18), 28 (19) *) of the sensor cable from the terminals of the controller PCB at the regulator. Jumper terminal 28 (19) *) with terminal 23 (14) *) or to the casing of the unit.

   Switch the regulator on for clockwise (cw) and enter a set value of around 10%. Increase the current by means of parameter *1/07* (current limit potentiometer VR4) *) until the rotor of the motor has rotated to the next pole. Switch off now and connect the sensor cable correctly again. Ensure that the rotor does not turn any further.

2. Switch the regulator on, but **without** activating the motor for operation (only mains voltage). LED's HS1 to HS3 (LED's 18 to 20) *) indicate the switching status of the Hall sensors in the position encoder. Now turn the encoder rotor clockwise (cw) on the motor shaft (without turning the motor shaft) so that HS3 (LED 19) *) lights up, HS2 (LED 20) *) does not light up and HS1 (LED 18) *) just lights up.

   If that is achieved, fix the encoder rotor, using the two screws on the motor shaft at a distance of about 2.5mm to sensor board (tip: „Take an aluminum sheet of 2.5 mm thickness in order to check the distance „). Please make sure that the encoder rotor have no contact with any part of the sensor board. The rotor should be set accurate to about 3 ° now.

*) *The LED or terminal description in brackets only applies for our hardware regulator series TA-BL 1 - 300 (control PCB TA-BL /E91 part No. 38243-00)*

The LED or terminal description without brackets applies for our programmable regulator series TA-BL/P 4.1 - 300.1.

5.2 Adjustment of the encoder with U-Drive

If it is necessary to dismantle the encoder, before dismantling it mark the position of the encoder rotor with respect to the motor shaft and the position of the encoder PCB to the bracket. When the motor is dismantled, the encoder must be installed such that it lines up with the magnets of the rotor as well as the windings in the stator.

If the encoder is to be replaced or the stator is to have new windings, it is necessary to recalibrate the position encoder.

1. Connect the motor and the sensor line according to instruction on the control unit. Enable via U-Drive Manager, in parameter group 2, with parameter 39 bit 1 „adjust speed encoder“ and „fix the motor rotor“ with bit 3. Enter about 30% of the rated motor current with parameter 49 „SM Adjusting current“. Please make sure that the motor shaft is disconnected from the machine!

2. Start the controller! The LEDs LED U, V and W indicate the switching state of the Hall sensors on the position sensor. Now rotate the encoder rotor clockwise (CW) on the motor shaft (without twisting motor shaft), so that LED V lights, U does not light and W just lights. If that is achieved, fix the encoder rotor, using the two screws on the motor shaft at a distance of about 2.5mm to sensor board (tip: „Take an aluminum sheet of 2.5 mm thickness in order to check the distance „). Please make sure that the encoder rotor have no contact with any part of the sensor board. The rotor should be set accurate to about 3 ° now.

3. Turn the drive off and set „adjust speed encoder“ and „fix motor rotor“ back.

3. The encoder is now adjusted and the motor is operational.

We assume no responsibility for printing errors and reserve the right to make technical changes or improvements at any time.

6.0 Troubleshooting

If the motor does not work as expected, the cause of the error is not necessarily to be found directly in the drive unit. It is far more the case of regarding the entire drive system including the driven machine as a whole when troubleshooting.

The possible causes of errors are shown in the following examples of problems:

Problem: The shaft of the motor moves backwards and forwards

1. The motor cable between the regulator and the motor has not been connected properly. It should be noted that U must be connected to U, V to V and W to W.
2. The sensor cable has not been connected correctly or the cable or the sensor are defective. In order to check this, remove the motor cable at the regulator (sensor cable remains connected). Now turn on only the mains voltage to the regulator and turn the motor shaft by hand anti-clockwise. You can check the correct functioning of the Hall sensors with the aid of LED's, 18 to 22 at the TA-BL, resp. HS1 - HS5 at the TA-BL/P, resp. U, V, W, A, B at the TA-U section of the regulator and light sequences diagram.

Illustration - Position encoder 8-pole 120 PPR

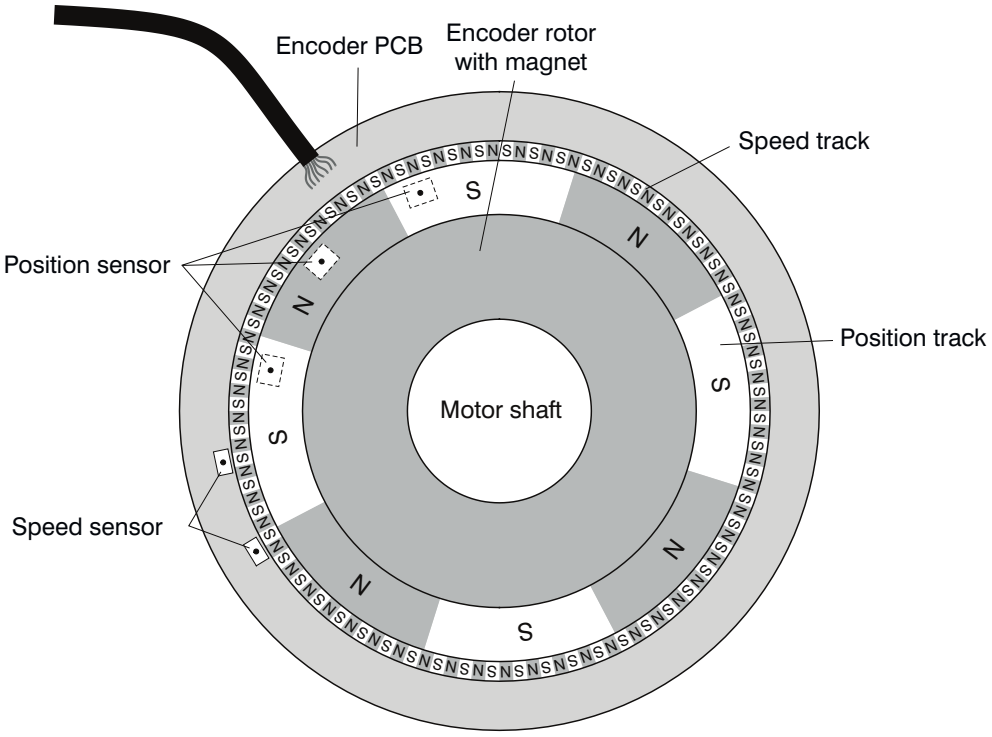

- Diagram light sequences
with motor rotation counter-clockwise (ccw) as seen at the output shaft

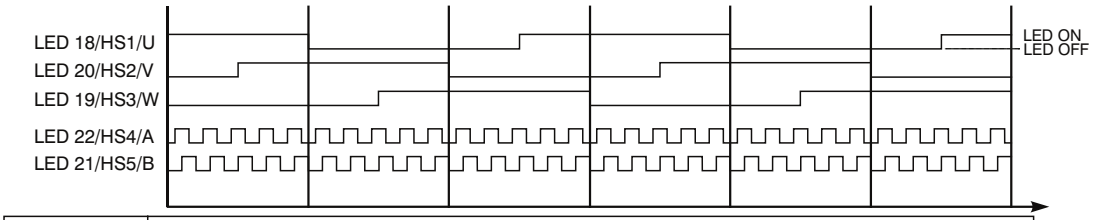

4-pole Motor	0°	60°	120°	180°	240°	300°	360°
6-pole Motor	0°	40°	80°	120°	160°	200°	240°
8-pole Motor	0°	30°	60°	90°	120°	150°	180°
	Motor rotation in °						

Problem: Jumpy changes in speed

1. The sensor cable between the motor and regulator has not been screened properly or has been laid in parallel with a small clearance from the motor cable, or is defective. In order to check this, remove the motor cable at the regulator (sensor cable remains connected). Now turn on only the mains voltage to the regulator and turn the motor shaft by hand anti-clockwise. You can check the correct functioning of the Hall sensors with the aid of LED's, 18 to 22 at the TA-BL, resp. HS1 - HS5 at the TA-BL/P, resp. U, V, W, A, B at the TA-U section of the regulator and light sequences diagram.

2. The signals of the speed and position encoders are not clean or missing completely. Check the switching of the Hall sensors.
3. The bearings are defective. An increase in the amount of power drawn and overheating can be the consequence. In this case the motor and the regulator are equally affected.
4. Enormous changes in load can be the cause of the jumping of the speed.

Problem: Excessive bearing play (axial)

Ensure that the motor shaft is not excessively loaded by a thrusting force.

1. Check that the bearing cover is firmly located. Check the bearing cover screws on the encoder end bracket.
2. The bearings were overloaded.
3. The bearing running surfaces are worn.

Problem: Excessive bearing play (radial)

Ensure that the radial loading of the shaft is below the stipulated limiting value given in the table for permissible radial forces (section 2.5.2).

1. The bearings have been released from the shaft.
2. The bearings were heavily overloaded.
3. The bracket or the shaft could be damaged.

Problem: Excessive vibration of the motor

1. The pulley is not properly balanced. Check the groove and feather key.
2. The motor fastening bolts could be loose.
3. The rotor is not balanced. Check this by running the motor without load and the pulley with a half feather key.
4. There is excessive radial shaft play (see above).
5. The bearings could be damaged. Check for unusual noises of the bearings.
6. A stator coil is not connected or has short-circuited. Check the current and the connections.

**)* *The LED or terminal description in brackets only applies for our hardware regulator series TA-BL 1 - 300 (control PCB TA-BL /E91 part No. 38243-00)*

The LED or terminal description without brackets applies for our programmable regulator series TA-BL /P 4.1 - 300.1.

We assume no responsibility for printing errors and reserve the right to make technical changes or improvements at any time.

Problem: The motor runs hot when under load



Warning!
Never check the motor temperature by touching it:
Use a measuring instrument!

1. Check the ambient temperature. The stipulated motor rating only applies for an ambient temperature of max. 40°C. Note that the place of installation should be less than 1000 m above sea level.
2. Check the motor loading. Do not exceed the stated nominal current.
3. Check the play of the motor under load. The effective motor loading must not exceed 100%.
4. The brake has not been released. Check the brake.
5. The bearings are damaged. Run the motor without load.
6. The rotor rubs against the stator. Listen for the corresponding noises.
7. Part of the stator coils could have short-circuited. Run the motor without load. Measure the inductance of the U-V; U-W; V-W coils. The tolerance should be less than 5%.

Problem: The motor runs hot when not under load

1. Proceed first of all as per the points given in the previous section: „Motor runs hot when under load".
2. The regulator has been set incorrectly. Check the regulator.
3. The pulse encoder has been set incorrectly, see section 5.
4. The magnets could have been destroyed. Check the terminal voltage (EMF) of the motor.
5. The bearings could have been excessively loaded.

Problem: The motor speed is too high

1. Check the speed settings at the regulator.
2. The connections of the speed sensors could have been made incorrectly. No speed regulation is possible.
3. Check the settings of the unit by using a Digitmaster DGM 2000.

Problem: Low output torque at nominal rated current

1. The regulator could have been set incorrectly. (LED 2 1Q and LED 4 4Q) *) or LED 6 and LED 7 flicker permanently.
2. A motor phase has not been connected. Check the connections of the motor cable.
3. Coils in the stator could have been partially short-circuited or not connected. Measure the motor inductivity. It must be the same in all 3 phases U-V, U-W and V-W. A tolerance of 5% is permissible.
4. The magnets could have been destroyed. Check the terminal voltage of the motor.

*) *The LED or terminal description in brackets only applies for our hardware regulator series TA-BL 1 - 300 (control PCB TA-BL /E91 part No. 38243-00)*

The LED or terminal description without brackets applies for our programmable regulator series TA-BL /P 4.1 - 300.1.

7.0 Types of motor protection and cooling

The types of protection of electrical machines are marked with two code numbers according to DIN 40050 and IEC 34-5. In this case the first number after the IP letters represents protection against contact and foreign bodies and the second number relates to protection against water.

Normal types of protection:

Description	1st code number	2nd code number
IP 00	No special protection against contact and foreign bodies.	No special protection against water.
IP 11	Protection against contact over a large area with live or moving parts. Protection against foreign bodies > 50 mm in diameter.	Protection against water droplets (vertical).
IP 23	Protection against contact with the fingers. Protection against foreign bodies > 12 mm in diameter.	No harmful effect from sprayed water up to an angle of 30° above the horizontal.
IP 44	Protection against contact with tools or the like with a thickness of > 1 mm.	No harmful effect from sprayed water from all directions.
IP 54	Complete protection against contact with live parts of internal rotating parts. Protection against harmful accumulations of dust in the interior.	No harmful effect from sprayed water from all directions.
IP 55	Complete protection against contact with live parts of internal rotating parts. Protection against harmful accumulations of dust in the interior.	A water jet from a nozzle that is directed against the machine from all directions does not have any harmful effect.
IP 65	Complete protection against touching live parts or internal rotating parts.	Protection against the penetration of dust.

Additional letters
Letters R and W are placed between the IP and the two code numbers; letters S and M after the two letters. The absence of letters S or M means that the test for water protection was made when the machine was stationary and not moving.
See the table above *„Normal types of protection“* without additional letters.

R for machines with pipe connection

W for machines protected against the weather

S for machines tested for protection against water while stationary

M for machines tested for protection against water while running

Example of the details of a type of protection:

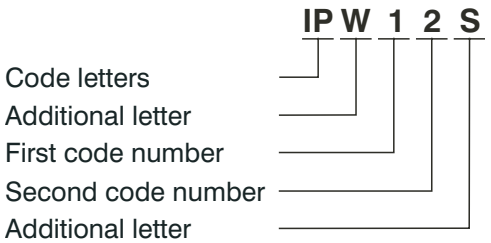

The type of protection and cooling of a motor have a close relationship to each other. The type of protection is determined by the type of cooling. In this case it also depends on whether the cooling is only done with the aid of convection from outside or whether the motor has openings so that cooling air can flow through the motor. A constant torque over the stipulated speed setting range can only be achieved with corresponding cooling. With speed ratings of less than 20 rpm this can cause uneven concentric running of the motor, especially if the loading is very low. The motor can however be fully loaded. Blockages and very low speed are possible with full torque (nominal rated current).

We assume no responsibility for printing errors and reserve the right to make technical changes or improvements at any time.

The following types of protection and cooling are possible:

Type of protection: IP 23; type of cooling: IC 01

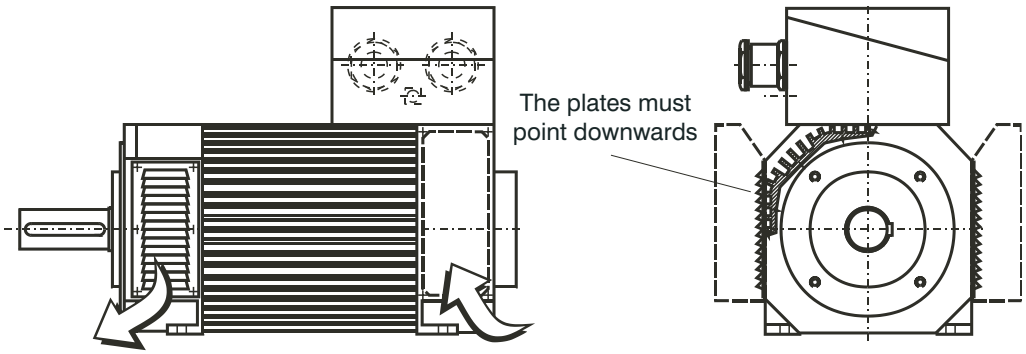

Illustration with filter

This motor has a fan wheel attached internally to the motor shaft. Thus external air is drawn through the motor for cooling. The motor is protected against water drops (not in the fan inlet area).
The speed setting range can be 2:1 or 100:1 respectively depending on the size of the motor and the utilisation of a constant rated torque. Please refer to the motor type plate.

Type of protection: IP 23; type of cooling: IC 06

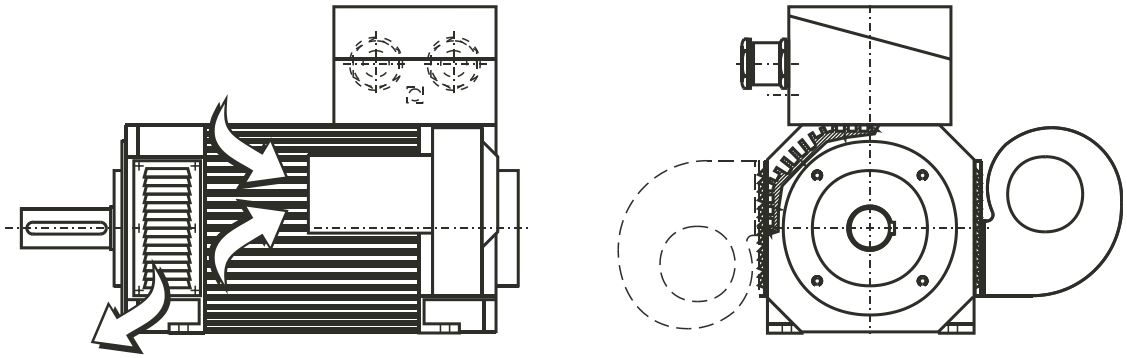

An external fan cools the motor. The fan is attached to the encoder end of the motor and conveys the air from the ventilation slots of the drive end. The fan is driven by its own motor. The motor is protected against water droplets (not in the fan inlet area). The speed setting range for constant torque is 100:1.

Type of protection: IP 54; type of cooling: IC 410
(Old cooling type designation: IC 00 41)

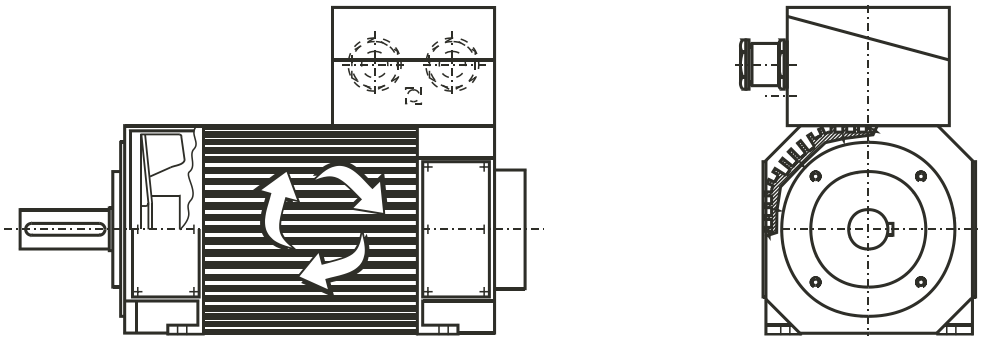

This motor has no opening for air circulation. The cooling is done internally by a fan wheel on the motor shaft, giving off heat through natural convection and radiation via the casing surface. The speed setting range for constant rated torque is 1:100. Please refer to the motor type plate.

Type of protection: IP 54; type of cooling: IC 411
(Old cooling type designation: IC 01 41)

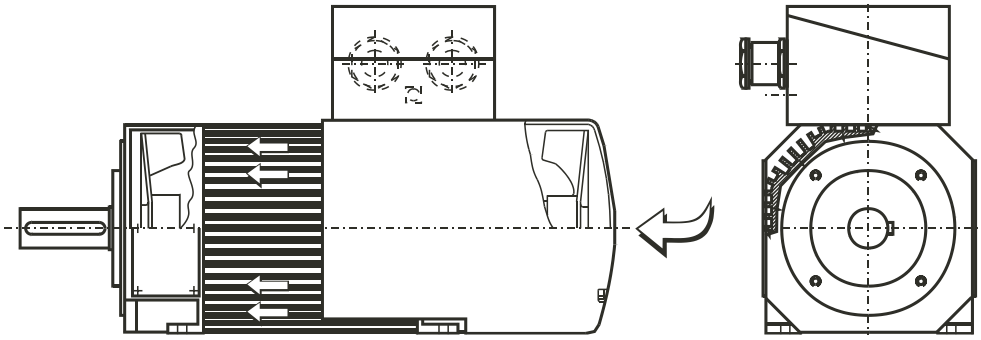

This motor has no opening for air circulation. A fan wheel mounted externally on the motor shaft improves the cooling effect through surface circulation. Higher ratings than for cooling type IC 410 are possible. At low speed this type of cooling is no longer sufficient. For this reason the speed range for constant rated torque is limited to 2:1. Please refer to the motor type plate.

Type of protection: IP 55; type of cooling: IC 416
(Old cooling type designation: IC 06 41)

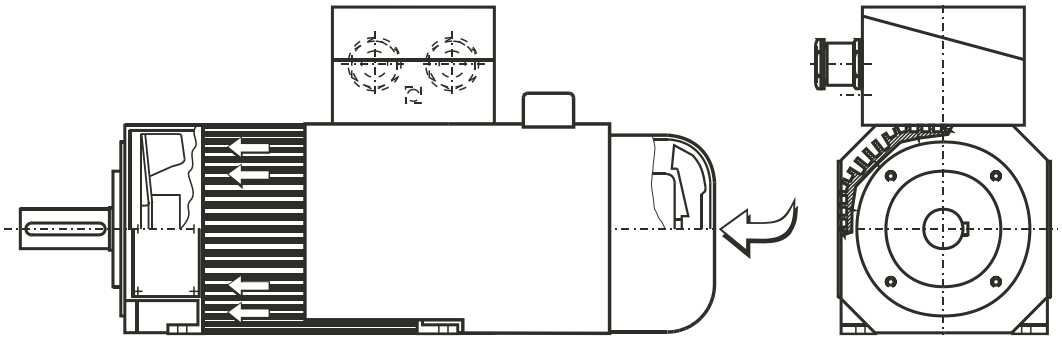

This motor has no opening for air circulation. Nonetheless it is still possible to attain high speed ranges and ratings. An external fan cools the surface of the motor. If the ventilation is independent of the motor speed, it is possible to have an speed setting range at constant torque of 100:1. Please refer to the motor type plate.

We assume no responsibility for printing errors and reserve the right to make technical changes or improvements at any time.

8.0 Types of construction

The normal types of construction and brief description as per EN 60034-7: Code I, Code II and DIN 42950 are given in the following illustrations. Other types of construction on request.

Illustration	Designation	Description
	Code I Code II *DIN 42950*	
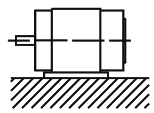	**IM B3** IM 1001 *B3*	Shaft horizontal, pedestal configuration
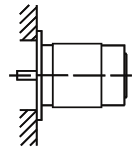	**IM B5** IM 3001 *B5*	Shaft horizontal, fastening flange with holes
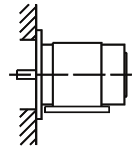	**IM B35** IM 2001 *B3/B5*	Shaft horizontal, fastening flange with holes, pedestal configuration
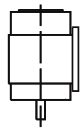	**IM V5** IM 1011 *V5*	Shaft vertical, pedestal configuration
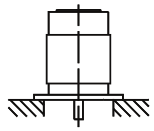	**IM V1** IM 3011 *V1*	Shaft vertical, fastening flange with holes
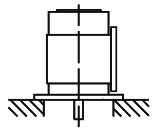	**IM V15** IM 2011 *V1/V5*	Shaft vertical, fastening flange with holes, pedestal configuration
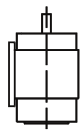	**IM V6** IM 1031 *V6*	Shaft vertical, pedestal configuration
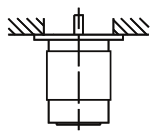	**IM V3** IM 3031 *V3*	Shaft vertical, fastening flange with holes
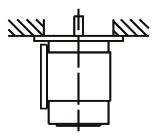	**IM V35** IM 2031 *V3/V6*	Shaft vertical, fastening flange with holes, pedestal configuration

Illustration	Designation	Description
	Code I Code II *DIN 42950*	
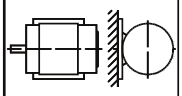	**IM B6** IM 1051 *B6*	Shaft horizontal, pedestal configuration (left), fastening to the wall
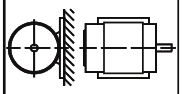	**IM B7** IM 1061 *B7*	Shaft horizontal, pedestal configuration (right), fastening to the wall
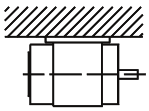	**IM B8** IM 1071 *B8*	Shaft horizontal, pedestal configuration, fastening to the ceiling
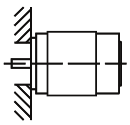	**IM B14** IM 3601 *B14*	Shaft horizontal, fastening flange with thread
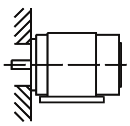	**IM B34** IM 2101 *B3/B14*	Shaft horizontal, fastening flange with thread, pedestal configuration
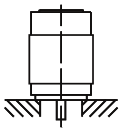	**IM V18** IM 3611 *V18*	Shaft vertical, fastening flange with thread
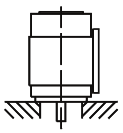	**IM V17** IM 2111 *V5/V18*	Shaft vertical, fastening flange with thread, pedestal configuration
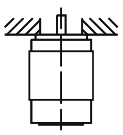	**IM V19** IM 3631 *V19*	Shaft vertical, fastening flange with thread
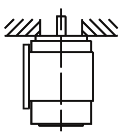	**IM V37** IM 2131 *V6/V19*	Shaft vertical, fastening flange with thread, pedestal configuration

9.0 Type plate

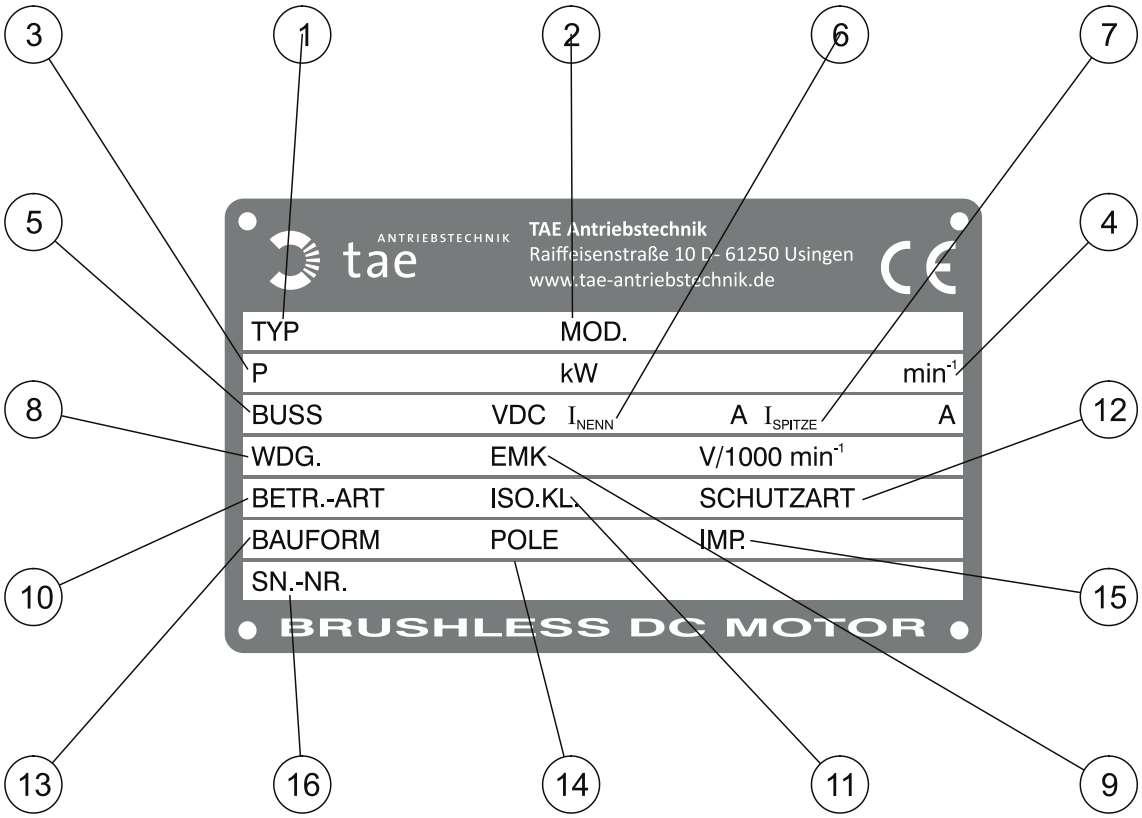

Explanations:

1) Type designation
2) Model number
3) Rated output power in kW
4) Rated speed
5) Nominal rated bus voltage
6) Nominal rated current (effective value at the nominal rated data)
7) Peak current (The effective peak current may never be exceeded, since otherwise the motor windings will overheat too quickly and ultimately burn out)
8) Winding type, e.g. Q, P, O, N or L
9) EMK motor under no-load running conditions at 1000 rpm at 25°C
10) Type of operation as per VDE 0530
11) Insulation class as per VDE 0530
12) Type of protection (IP23 or IP 54) as per IEC 34-5 and DIN 40050
13) Construction (B3, B5 or B14) as per IEC 34-7 and DIN 42950
14) Number of poles of motor, 4-pole, 6-pole or 8-pole
15) Pulse count from speed encoder, 30 or 60 pulses
16) Serial number

We assume no responsibility for printing errors and reserve the right to make technical changes or improvements at any time.

10.0 General drawings and spare parts lists

10.1 General drawing and spare parts list BL-N-71 to BL-N-100

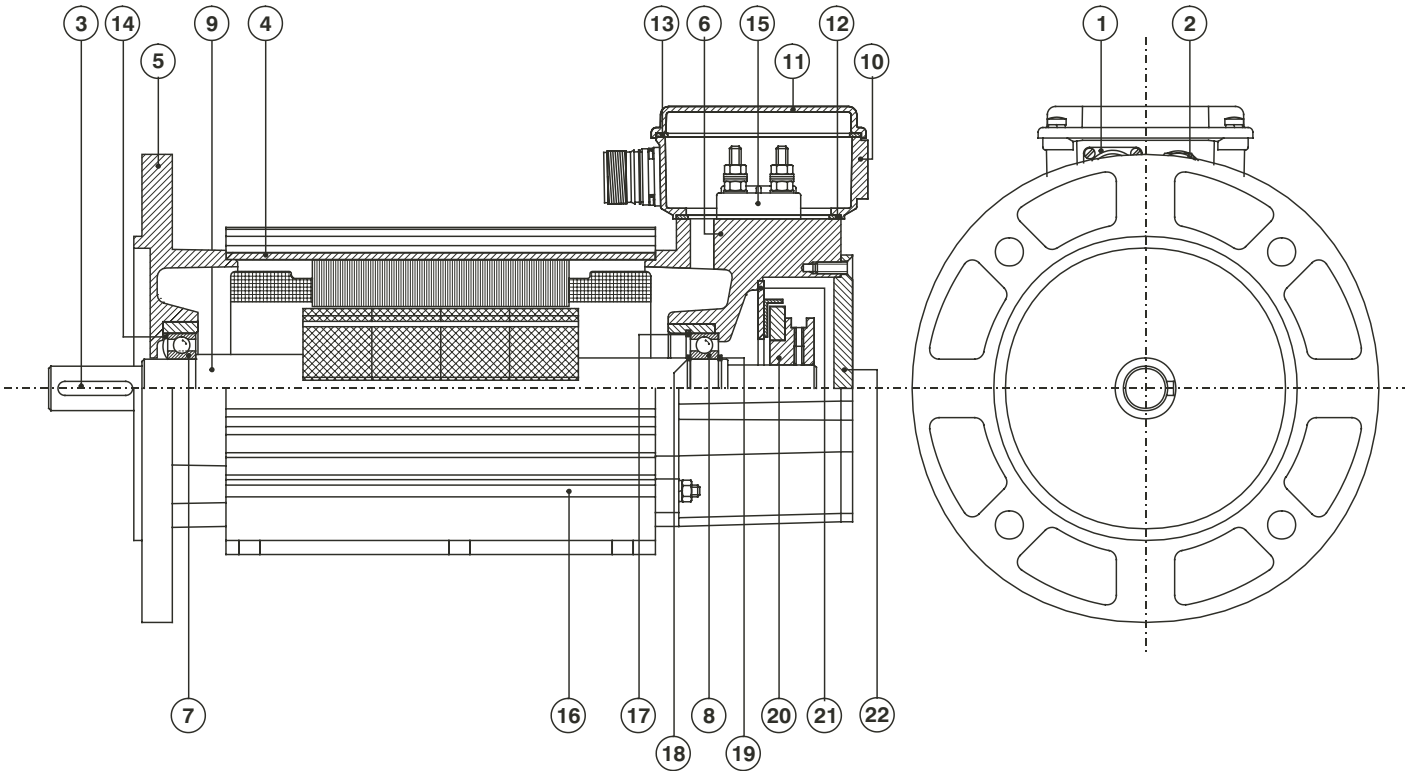

1 Built-in socket
2 Screwed cable gland
3 Feather key
4 Stator
5 Drive end bracket
6 Encoder end bracket
7 Ball bearing drive end
8 Ball bearing encoder end
9 Shaft
10 Terminal box
11 Terminal box cover
12 Seal of terminal box
13 Seal of terminal box cover
14 Spring disk
15 Terminal board
16 Tie rod (4x)
17 Locking ring bracket
18 Locking ring shaft
19 Locking ring shaft
20 Encoder rotor
21 Encoder PCB
22 Encoder end bracket cover

We assume no responsibility for printing errors and reserve the right to make technical changes or improvements at any time.

10.2 General drawing and spare parts list BL-N-112 to BL-N-180

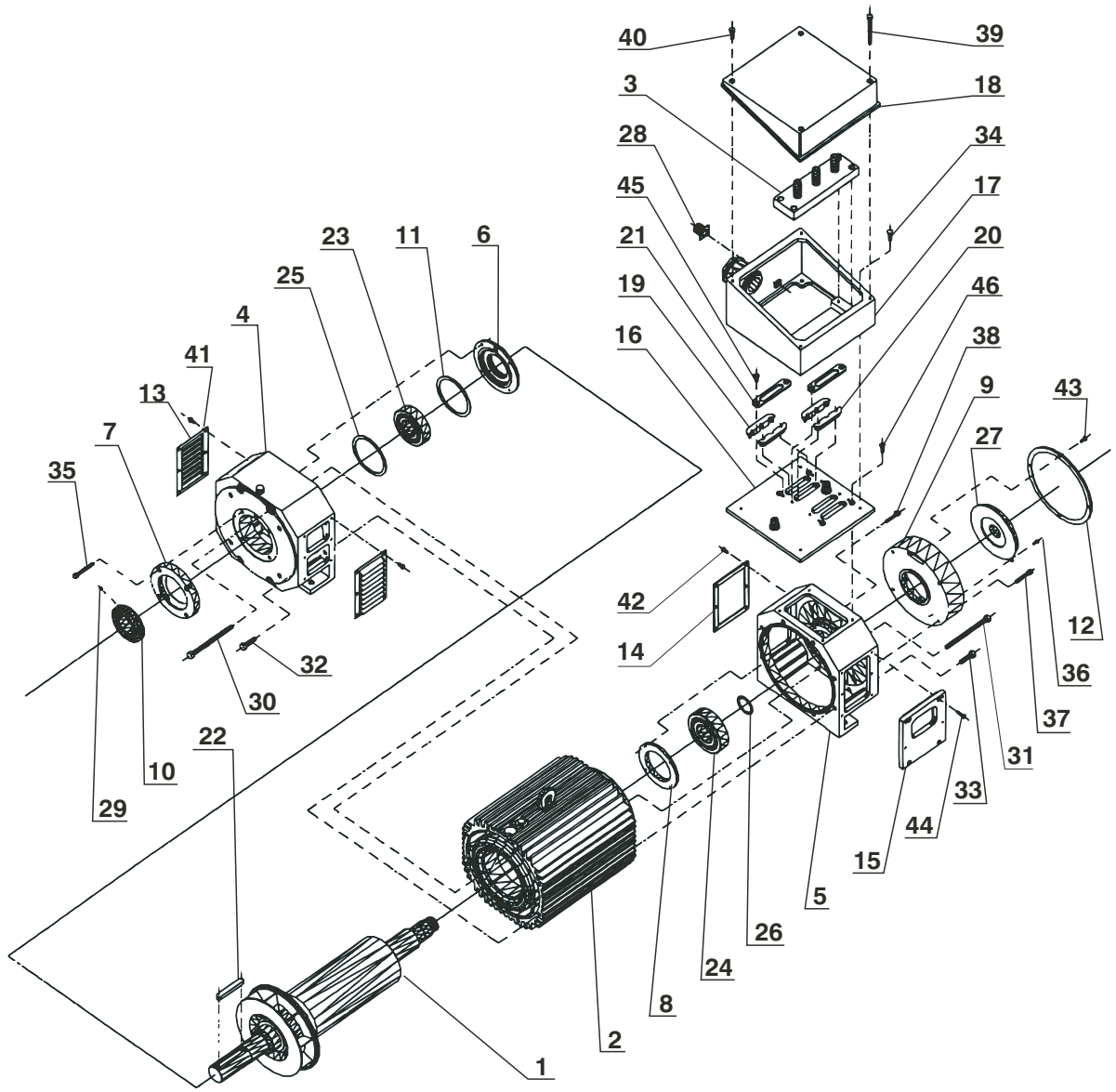

1	Rotor	**16**	Terminal intermediate spacer	**31**	Hexagonal screw
2	Casing with stator coils	**17**	Terminal box	**32**	Hexagonal screw
3	Terminal board	**18**	Terminal box cover	**33**	Hexagonal screw
4	Drive End bracket	**19**	High power current leadthrough	**34**	Hexagonal screw
5	Encoder End bracket	**20**	Signal leadthrough	**35**	Allen screw
6	Inner bearing cover	**21**	Shim plate	**36**	Allen screw
7	Outer bearing cover	**22**	Feather key	**37**	Allen screw
8	Inner bearing cover	**23**	Roller bearings or ball bearings	**38**	Allen screw
9	Outer bearing cover	**24**	Ball bearings	**39**	Allen screw
10	Oil spray disk	**25**	Spring disk	**40**	Allen screw
11	Spacer ring	**26**	Shaft locking ring	**41**	Machine screw with slot
12	Cover	**27**	Encoder	**42**	Machine screw with slot
13	Cover plate with protective plates	**28**	Built-in socket	**43**	Recessed screw with slot
14	Side cover	**29**	Set screw	**44**	Recessed screw with slot
15	Ventilation intermediate spacer	**30**	Hexagonal screw	**45**	Recessed screw with slot
				46	Recessed screw with slot

We assume no responsibility for printing errors and reserve the right to make technical changes or improvements at any time.

ISOFLEX® NCA 15

High-speed lubricating grease for plain and rolling bearings

Description:

ISOFLEX NCA 15 is a dynamically light grease with good pressure absorption properties for plain and rolling bearings. It consists of ester oil, synthetic hydrocarbon oil, mineral oil and special calcium soap. The product is resistant to water and protects reliably against wear.

Application:

ISOFLEX NCA 15 is particularly suitable for the lubrication of spindle and tapered roller bearings, threaded spindles, ball screws subject to high loads, and for all high-speed bearings, e.g. bearings in OE-spinning turbines used in the textile industry. It is also suitable for tooth flanks of precision gears (bevel gears in milling machines).

Application notes:

The lubricant is applied by brush, spatula, grease gun or grease cartridge. Owing to the different compositions of elastomers and plastic materials, compatibility tests are indispensable before series application.

Minimum shelf life:

The minimum shelf life is approx. 36 months if the product is stored in the original closed container in a dry place.

Pack sizes:

400 g cartridge
1 kg can
25 kg bucket

ISOFLEX NCA 15

- Rolling bearing grease
- For very high speeds
- Good pressure absorption
- Good resistance to water
- Good wear protection
- Resistant to oxidation and ageing

Product data:

Colour	beige
Texture	homogeneous, short-fibred
Density, at 20 °C, g/cm^3, approx.	0.94
Service temperature range*, °C, approx.	– 50 to 120
Drop point, DIN ISO 2176, °C	> 180
Worked penetration, DIN ISO 2137, (ASTM D 217); 0.1 mm	265 to 295
Water resistance, DIN 51 807/1, 3 h / 90 °c, rating	0/1 – 90
Base oil viscosity, DIN 51 562/1, at 40 °C, mm^2/s, approx. at 100 °C, mm^2/s, approx.	23.0 4.7
Speed factor** ($n \times d_m$), mm x min^{-1}, approx.	1,300,000
Apparent dynamic viscosity***, Klüber viscosity grade	L/M

* Service temperatures are guide values which depend on the lubricant's composition, the intended use and the application method. Lubricants change their consistency, apparent dynamic viscosity or viscosity depending on the mechano-dynamical loads, time, pressure and temperature. These changes in product characteristics may affect the function of a component.

** Speed factors are guide values which depend on the type and size of the rolling bearing type and the local operating conditions, which is why they have to be confirmed in tests carried out by the user in each individual case.

*** Klüber viscosity grades: EL = extra light lubricating grease; L = light lubricating grease; M = medium lubricating grease; S = heavy lubricating grease; ES = extra heavy lubricating grease

ISOFLEX® NCA 15
Safety Data Sheet

1.1 Product name: ISOFLEX NCA 15
Code-No.: 004 180
19.01.2001

1.2 Klüber Lubrication München KG
Geisenhausenerstraße 7
D-81379 München
Tel. ++49 - 89 78 76 - 0 telephone exchange
Fax: ++49 - 89 78 76 - 333

Emergency telephone no.:
++49 - 89 7876 - 0

2. Composition / information on ingredients
Chemical characterization (preparation): Ester oil, synthetic hydrocarbon oil, mineral oil, special calcium soap

3. Hazards identification
No particular hazards known

4. First aid measures
After inhalation: Not applicable
After contact with skin: Wash off with soap and plenty of water
After contact with eyes: Rinse with plenty of water
After ingestion: Do not induce vomiting. Obtain medical attention
Advice to doctor: Treat symptomatically

5. Fire-fighting measures
Suitable extinguishing media: Water spray, foam, dry powder, carbon dioxide (CO_2)
Unsuitable extinguishing media: High volume water jet
Special Hazards: In case of fire the following can be released: Carbon monoxide, hydrocarbons
Special protective equipment for firefighters: Standard procedure for chemical fires
Additional information: Water mist may be used to cool closed containers. In the event of fire and/or explosion do not breathe fumes

6. Accidental release measures
Personal precautions: Not required
Environmental precautions: Do not flush into surface water or sanitary sewer system
Methods for cleaning up / taking up: Use mechanical handling equipment. Dispose of absorbed material in accordance with the regulations
Additional information: None

7. Handling and storage
Advice on safe handling: No special handling advice required
Advice on protection against fire and explosion: No special precautions required
Requirements on storage rooms and vessels: Store at room temperature in the original container
Incompatible materials: Incompatible with oxidizing agents. Do not store together with food
Further information on storage conditions: None

8. Exposure controls / personal protection
Additional advice on system design: Not applicable
Ingredients and specific control parameters: None
Respiratory protection: No special protective equipment required
Hand protection: No special protective equipment required
Eye protection: No special protective equipment required
Body protection: No special protective equipment required
Other protection measures: No special protective equipment required
General protection and hygiene measures: Avoid prolonged and/or repeated contact with skin. Remove soiled or soaked clothing immediately. Clean skin thoroughly after work; apply skin cream

9. Physical and chemical properties

Form	paste
Colour	beige
Odour	characteristic
Drop point	> 180 °C, DIN ISO 2176
Flash point	> 200 °C (base oil)
Ignition temperature	not applicable
Lower explosion limit	not applicable
Upper explosion limit	not applicable
Vapour pressure-first	not applicable
Density	approx. 0.94 g/cm^3, 20 °C
Water solubility	insoluble
pH value	not applicable
Kinematic viscosity	not applicable
Further information	none

10. Stability and reactivity
Conditions to avoid: None
Materials to avoid: Strong oxidizing agents
Hazardous decomposition products: None under normal use
Additional information: None

11. Toxicological information
The toxicological data has been taken from products of similar composition
Acute toxicity: LD_{50}/oral/rat = > 2 g/kg (literature data)
Chronic toxicity: None
Human experience: Prolonged skin contact may cause skin irritation and/or dermatitis

12. Ecological information
Information on elimination (persistence and degradability): Product is insoluble in water. May be separated out mechanically in purification plants
Behaviour in environmental compartments: Ecological injuries are not known or expected under normal use
Ecotoxic effects: Aquatic toxicity is unlikely due to low solubility
Additional information: Should not be released into the environment

13. Advice on Disposal
Disposal: Can be incinerated when in compliance with local, state and federal regulations
Dispose of contaminated packaging and recommended cleaning: Offer rinsed packaging material to local recycling facilities

14. Transport information

GGVS / GGVE:	not applicable
ADN / ADNR:	not applicable
IMDG-Code:	not applicable
ICAO / IATA-DGR:	not applicable

Further information: Not classified as dangerous in the meaning of transport regulations

15. Regulatory information
Labelling according to EU-guidelines: The product does not require a hazard warning label in accordance with EC-directives/German regulations on dangerous substances
National regulations: Labelling according to the Swiss regulations: No toxicological class, BAGT-no. 611500

16. Other information
Issue-department of Safety Data Sheet: Chemical Documentation,
Tel.: ++49 - 89 7876 - 564

The data in this product information is based on our general experience and knowledge at the time of printing and is intended to give information of possible applications to a reader with technical experience. It constitutes neither an assurance of product properties nor does it release the user from the obligation of performing preliminary tests with the selected product. We recommend contacting our Technical Consulting Staff to discuss your specific application. If required and possible we will be pleased to provide a sample for testing. Klüber products are continually improved. Therefore, Klüber Lubrication reserves the right to change all the technical data in this product information at any time without notice.

Freudenberg Klüber Lubrication München KG, a member of the Freudenberg group

Publisher and Copyright:
Klüber Lubrication München KG

Reprints, total or in part, are permitted if source is indicated and voucher copy is forwarded.

Klüber Lubrication München KG
Postfach 70 10 47, D-81310 München
Tel. (0 89) 78 76-0, Telefax (0 89) 78 76-333