KESSLER

Milling spindles / H *line*

Up to speed fast:
Dynamic and robust for high loads



SPINDLE TECHNOLOGY I SYSTEM TECHNOLOGY I DRIVE TECHNOLOGY I SERVICE SOLUTIONS

www.kessler-group.biz



KESSLER spindle *lines*

Spindle technology with passion and expertise

The KESSLER milling spindles have a modular design.

Configure your own milling spindle model by specifying the installation position, motor, speed, bearing, lubrication and sensor system – the perfect customized solution for your individual branch and application needs.

KESSLER offers more: As an internationally successful company with extensive and highly specialized expertise, we provide comprehensive advice about the design and manufacture of individual components and project management of complex system solutions. We use the very latest technology and analytical processes to test our components under realistic conditions, so that our products help your business to stay flexible and maintain its competitive edge.

Our in-house development division is supported by extensive calculation and analysis skills and covers everything from direct drive technology to the construction of all-in-one systems. Furthermore, optimized production and assembly lines provide the framework for stable processes and the superior quality of our products.

End-to-end precision from the components to the on-site service

Founded in 1923 by Franz Kessler, the company has developed to become the leading supplier of motor spindles as well as directly driven 2-axis heads and rotary tilt tables for the machine tool industry. KESSLER is proud to list many major companies from the mechanical engineering sector amongst its long-standing customers.

With the expertise of more than 95 years, KESSLER is continuously developing and optimising its products. The KESSLER product range serves a wide range of sectors, processes and applications. Close cooperation with our customers remains our key focus. The extensive product range, from hightech spindles, 2-axis heads, rotary and rotary tilt tables to motors and direct drive systems, enables KESSLER to implement customised solutions with speed and flexibility.

Service is a matter of trust. Rely on us as your trusted service partner: KESSLER has an established global network of technology and service centres.

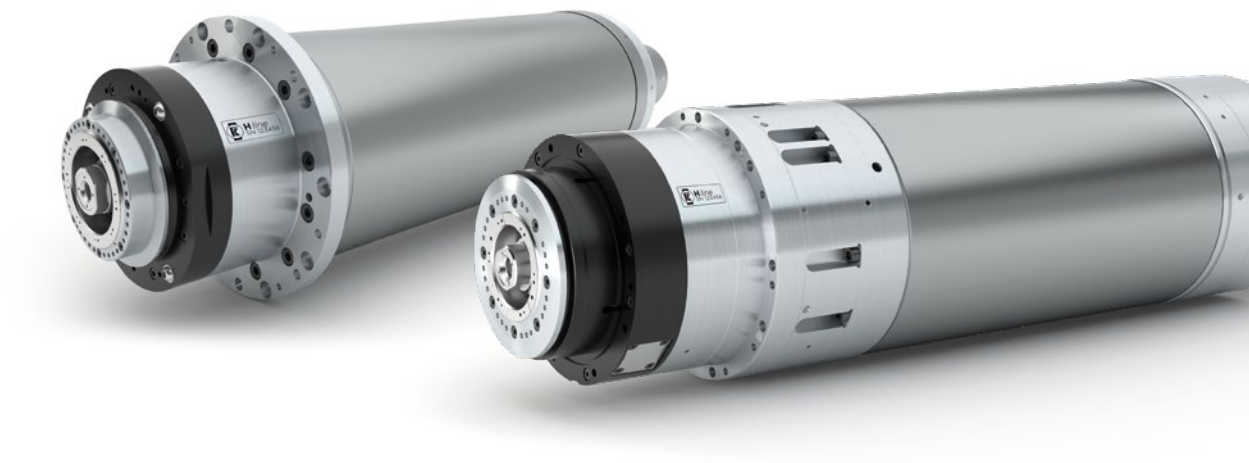

Masterpieces

KESSLER provides tailor-made spindle technology to suit your needs: Individual, flexible, modular and suitable for all areas of application

HC *line*									HC500	HC600
○ Heavy cutting ○ Aerospace titanium machining ○ Machining of large-scale parts										
PC *line*			PC80		PC100			PC400		
○ High speed ○ High power ○ High accuracy										
H *line*		H80		H100		H200				
○ **Horizontal installation** ○ **Very short acceleration and braking times**										
MT *line*		MT80			MT100			MT400	MT500	MT600
○ Very short construction ○ Used in tilting heads, turning and milling operations										
V *line*	V60		V80		V100		V200	V400		
○ Vertical installation ○ Tilting ○ Allrounder										
Spindle fitting Ø (mm)										
○ Open cooling housing	140		170		200		230	270	325	395
○ Closed with steel sleeve	150		180		210		240			
○ Closed with solid housing		170		200	230	240		310		

Availability on request

The H *line* is all about:

- **Horizontal machining**
- **Typical applications:** Automotive industry, process machines
- **Machining of similar work pieces** with similar working cycles with a high work frequency
- **Milling, drilling, thread cutting, grinding, boring of aluminium, castiron and steel**
- **Internal monitoring of spindles** (condition monitoring)
- **Tool clamping system designed for a maximum amount of tool changes**
- **High speed:** Up to 25,000 rpm
- **High torque:** More than 400 Nm



Our H *line* variants

Model	H80	H100	H200
Speed (rpm)	25,000	20,000	15,000 / 16,000
Spindle fitting Ø (mm)	170	200	240
Tool interface	HSK 63	HSK 63	HSK 63 / HSK 100

Impress with:

- **very short acceleration times**
- **high power**
- **low rotor torque of inertia**

All advantages of the modular system at a glance

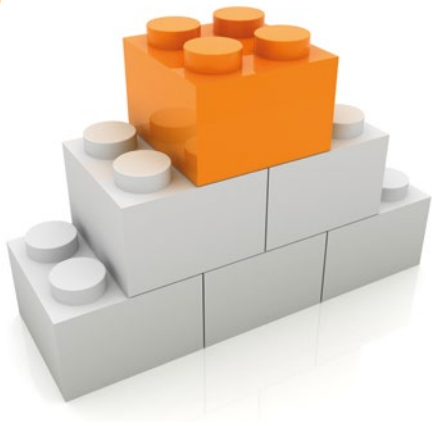

- **2× or 4× bearings available** (1)

- **Various spindle heads available** – Individual shapes can be defined as required

- **High degree of operational safety thanks to LEDs** due to optimal illumination of the tool intervention

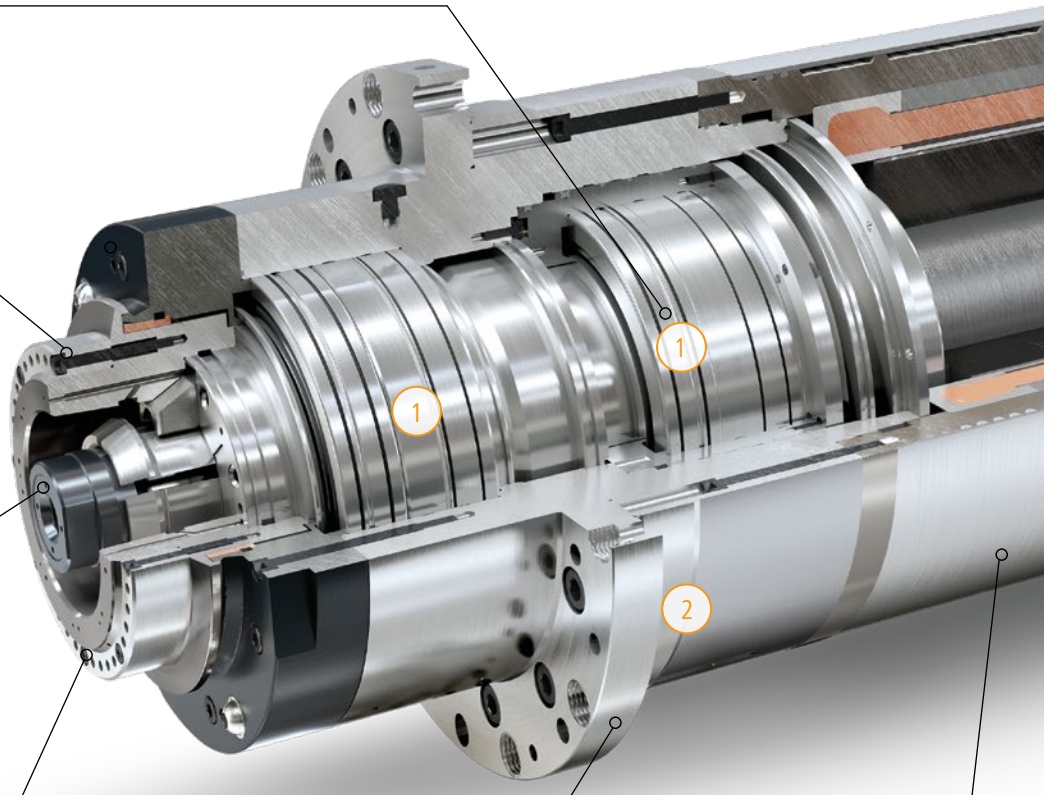

- **Variable interface** Full contact plane surface or segmented plane surface

- **Removable assembling flange**

- **Interface control (IFC)**

COOL***MOTION***®

- **The most suitable** COOL***MOTION***® **motor** for your individual needs: with very high torque, very high speed or high-compact design
- **Various bearing lubrication systems available**
- **Hydraulic or electrical release unit available**
- **High flexibility:** KESSLER rotary union for media: lubrication, dry operation, compressed air, MQL capability
- **Process reliability** due to extensive monitoring system
- **Spindle fitting diameter and position:** The spindle fitting diameter can be configured accordingly to meet your specific requirements (2)

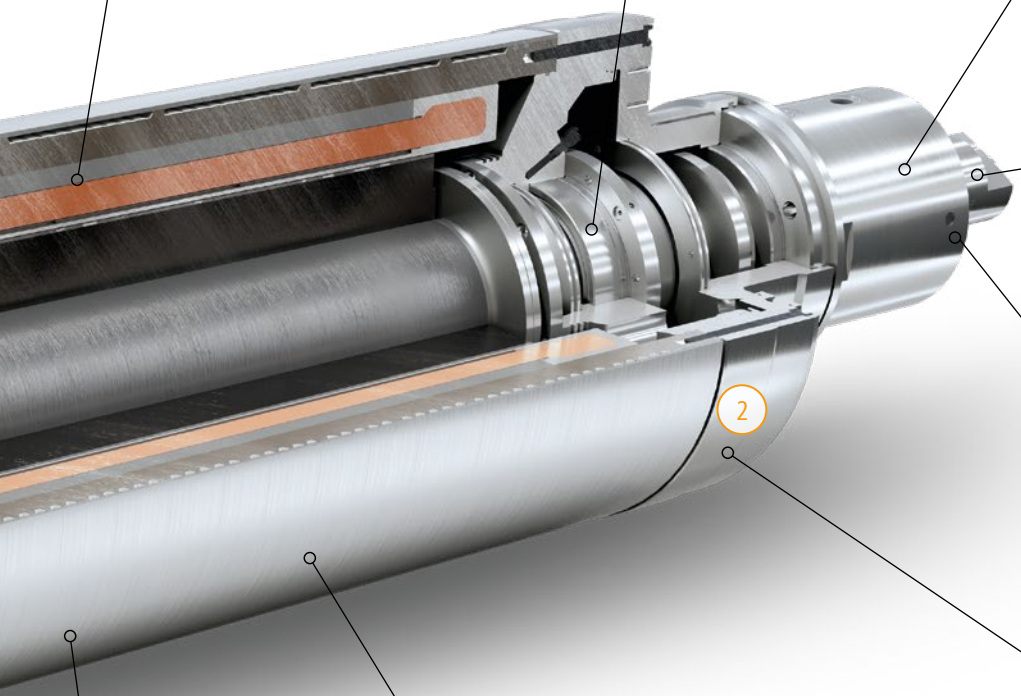

- **High productivity** due to short acceleration and braking times
- **High productivity** with KESSLER tool clamping system – Clamping spring package is designed for 5 million tool changes

HIGH QUALITY

MADE IN GERMANY

Milling spindle / H80

- **Spindle fitting:** Ø 170 mm
- **KESSLER** COOL***MOTION***® **motor**
- **KESSLER tool clamping system:** Clamping spring package designed for 5 million tool changes
- **Rotary union:** Internal coolant supply with high volume flow
- **Cooling:** Closed with steel sleeve
- **Bearing lubrication:** Grease / re-greasing / oil-air

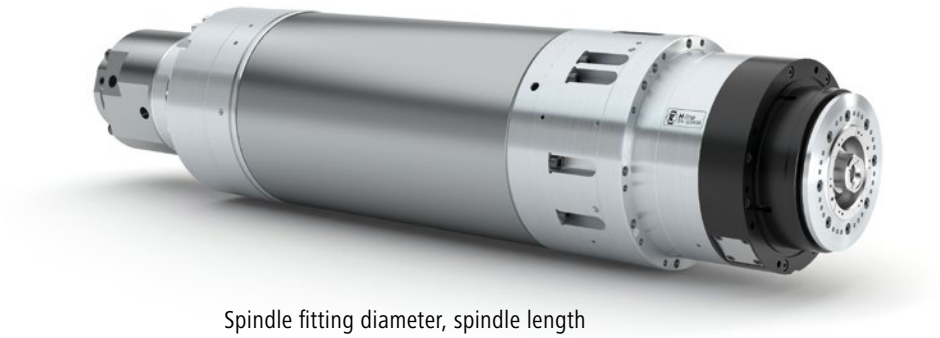

Spindle fitting diameter, spindle length and projecting length of spindle head can be configured according to your requirements.

COOL***MOTION***®

Choose the most suitable COOL***MOTION***® motor from the list of preferred motors

Model		S1		S6 / 40%		S6 / 25%		S6 max.		
	Max. speed (rpm)	Torque (Nm)	Power (kW)	Torque (Nm)	Power (kW)	Torque (Nm)	Power (kW)	Torque (Nm)	Power (kW)	
H80-S25	25,000	80	33	100	33	105	33	115	33	High speed
H80-S20	20,000	95	33	110	33	125	33	140	33	High torque
H80-A24	24,000	40	16	60	24	75	30	95	38	Entry-level

Milling spindle / H100

- **Spindle fitting:** Ø 200 mm
- **KESSLER** COOL***MOTION***® **motor**
- **KESSLER tool clamping system:** Clamping spring package designed for 5 milliontool changes
- **Rotary union:** Internal coolant supply with high volume flow
- **Cooling:** Closed with steel sleeve
- **Bearing lubrication:** Grease / re-greasing / oil-air

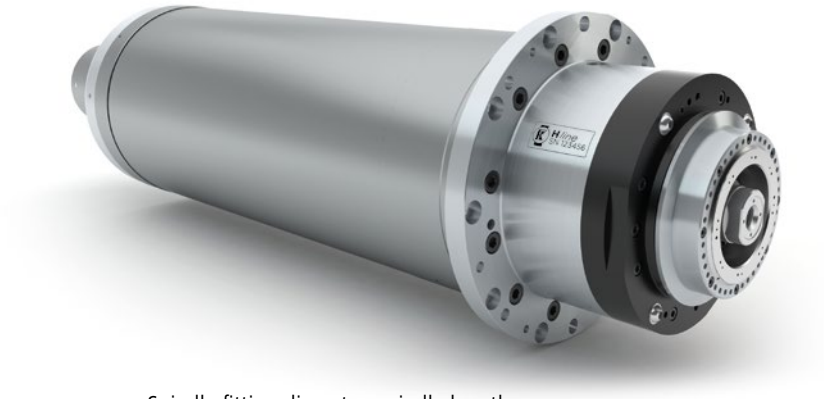

Spindle fitting diameter, spindle length and projecting length of spindle head can be configured according to your requirements.

COOL***MOTION***®

Choose the most suitable COOL***MOTION***® motor from the list of preferred motors

Model		S1		S6 / 40%		S6 / 25%		S6 max.		
	Max. speed (rpm)	Torque (Nm)	Power (kW)	Torque (Nm)	Power (kW)	Torque (Nm)	Power (kW)	Torque (Nm)	Power (kW)	
H100-S20	20,000	120	36	140	36	150	36	165	36	High speed
H100-S15	15,000	170	32	210	32	235	32	270	32	High torque
H100-A20	20,000	60	19	90	28	112	35	172	54	Entry-level

Milling spindle / H200

- **Spindle fitting:** Ø 240 mm
- **KESSLER** COOL***MOTION***® **motor**
- **KESSLER tool clamping system:** Clamping spring package designed for 5 million tool changes
- **Rotary union:** Internal coolant supply with high volume flow
- **Cooling:** Closed with steel sleeve
- **Bearing lubrication:** Grease / re-greasing / oil-air

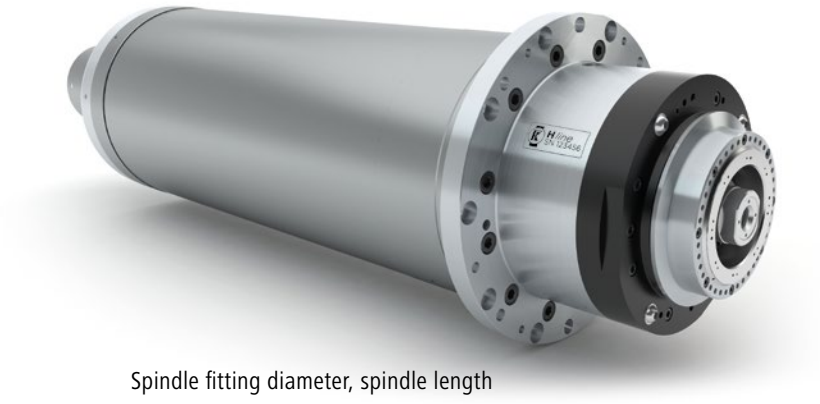

Spindle fitting diameter, spindle length and projecting length of spindle head can be configured according to your requirements.

COOL***MOTION***®

Choose the most suitable COOL***MOTION***® motor from the list of preferred motors

Model		S1		S6 / 40%		S6 / 25%		S6 max.		
	Max. speed (rpm)	Torque (Nm)	Power (kW)	Torque (Nm)	Power (kW)	Torque (Nm)	Power (kW)	Torque (Nm)	Power (kW)	
H200-S16	16,000	160	63	180	63	215	63	231	63	High speed
H200-S10	10,000	350	55	390	55	460	55	500	55	High torque
H200-A14	14,000	200	42	300	62	300	62	300	62	Entry-level



Modular extensions available

+ **Spindle heads**
  variable
+ **Bearing**
  2× or 4× bearings available
+ **Choose the most suitable KESSLER** COOL***MOTION***® **motor for your needs**
+ **KESSLER rotary union**
  - Coolant
  - Dry operation
  - Compressed air
  - MQL capability
+ **Spindle fitting Ø (position A and B side)** variable
+ **Sensor monitoring system**
  - Interface control (IFC)
  - Vibration sensor
  - Clamping status monitoring
  - Leakage monitoring
  - Temperature sensor PT100
+ **Segmented plane surface**
+ **Bearing preload**
  variable
+ **Assembling flange**
  removable
+ **Bearing lubrication**
  Grease / re-greasing / oil-air
+ **Standard cable outlet, connector optional**
+ **Holding-function for collet chuck**
  variable
+ **2-channel rotary union**

Accessories

+ **Oil-air lubrication unit**
+ **Re-greasing unit**
+ **Direct lubrication on demand**

Keeping up with the beat of the spindle

The KESSLER diaLOG intelligent system for data processing and condition monitoring is our solution for a connected industry

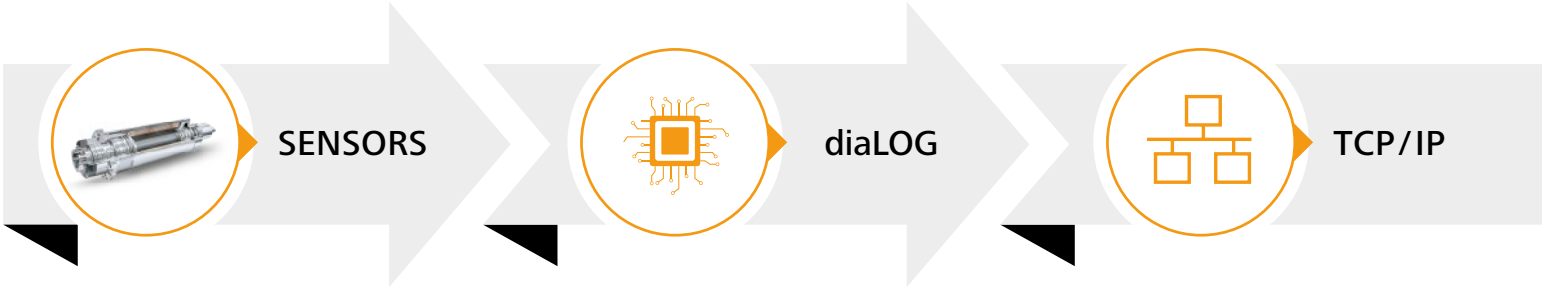

- Integrated electrical current, temperature and vibration sensors determine the current, frequency, temperature conditions and vibration acceleration.

- An intelligent digital network system (KESSLER diaLOG) analyses and evaluates process data.
- Detects and stores limit value exceedances
- Interface with the network infrastructure

- The system is equipped with a TCP/IP interface for data transfer. This system transmits diaLOG data either continuously or on request to the diaLOG App or client application.

KESSLER diaLOG
All advantages at a glance

- Condition monitoring by detecting limit value exceedances



- Reduces unscheduled downtimes
- Reduces machine downtime
- Improved operational reliability in customer processes (Process performance, operation time)
- Reduces TCO (Total Costs of Ownership)

ANALYSES

- Predefined limit values are continuously monitored and logged by the system. The diaLOG App has been developed for evaluating the diaLOG data.
- Its functions are planned to include preventive maintenance and continuous data collection.
- In future, correction factors from the motor spindle will be communicated to the user and warning messages are automatically transmitted to the process control system.
- KESSLER diaLOG incorporated in the product contributes to full process visualisation.
- Can be used throughout the product range with additional options for other areas.

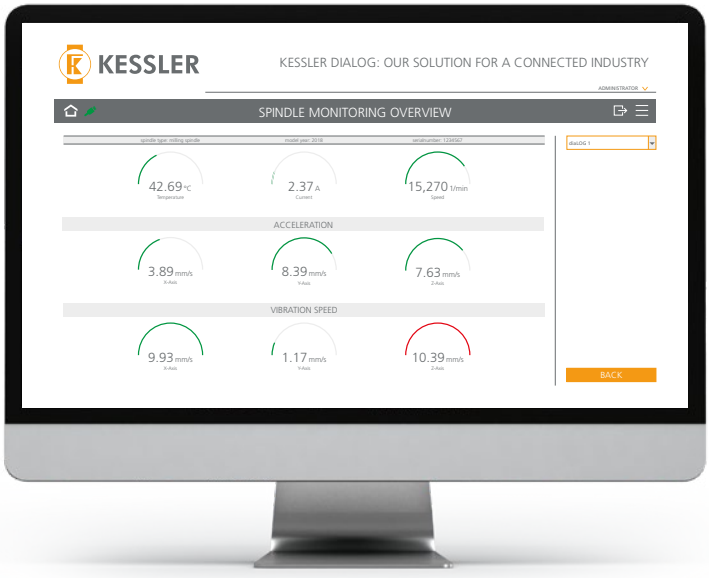

Available on request

diaLOG APP

- SPINDLE MONITORING
  - Live view of all diaLOG sensor data
  - Analysis of functions by means of individual values
- FINGERPRINT
  - KESSLER fingerprint
  - Detection of the as-found fingerprint (test bench)
  - Comparison in the case of spindle repairs
  - Commissioning fingerprint in the machine tool
  - Cyclical comparison with the new fingerprint
  - Data export
- CONDITION MONITORING
  - Display of captured limit value exceedances
  - Transport monitoring
  - Crash detection
  - Overload detection
  - Display of continuously captured data
  - Load spectra
  - Loading conditions
  - Histogram data
- PRODUCT DATA
  - Display of data on the spindle type plate
  - Display of converter parameters
  - Data export

Very short tool change cycle times

Electronic release unit

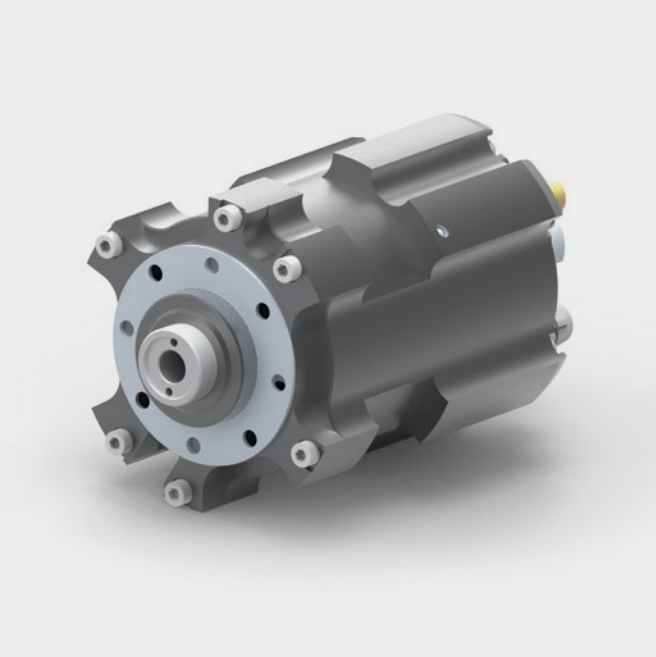

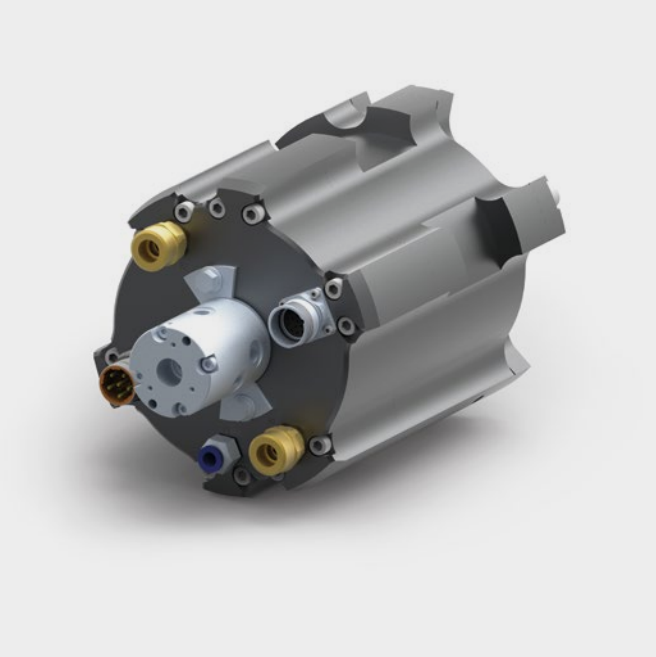

All advantages at a glance

- Higher accuracy due to reduced heat input into the machine tool, since no hydraulic unit is required
- Simple and quick to install
- Designed for at least 2 million tool changes
- Extremely short tool change time with 0.2 sec.
- Low-maintenance
- Energy-efficient
- Very fast chip-to-chip times possible due to short tool change cycle times

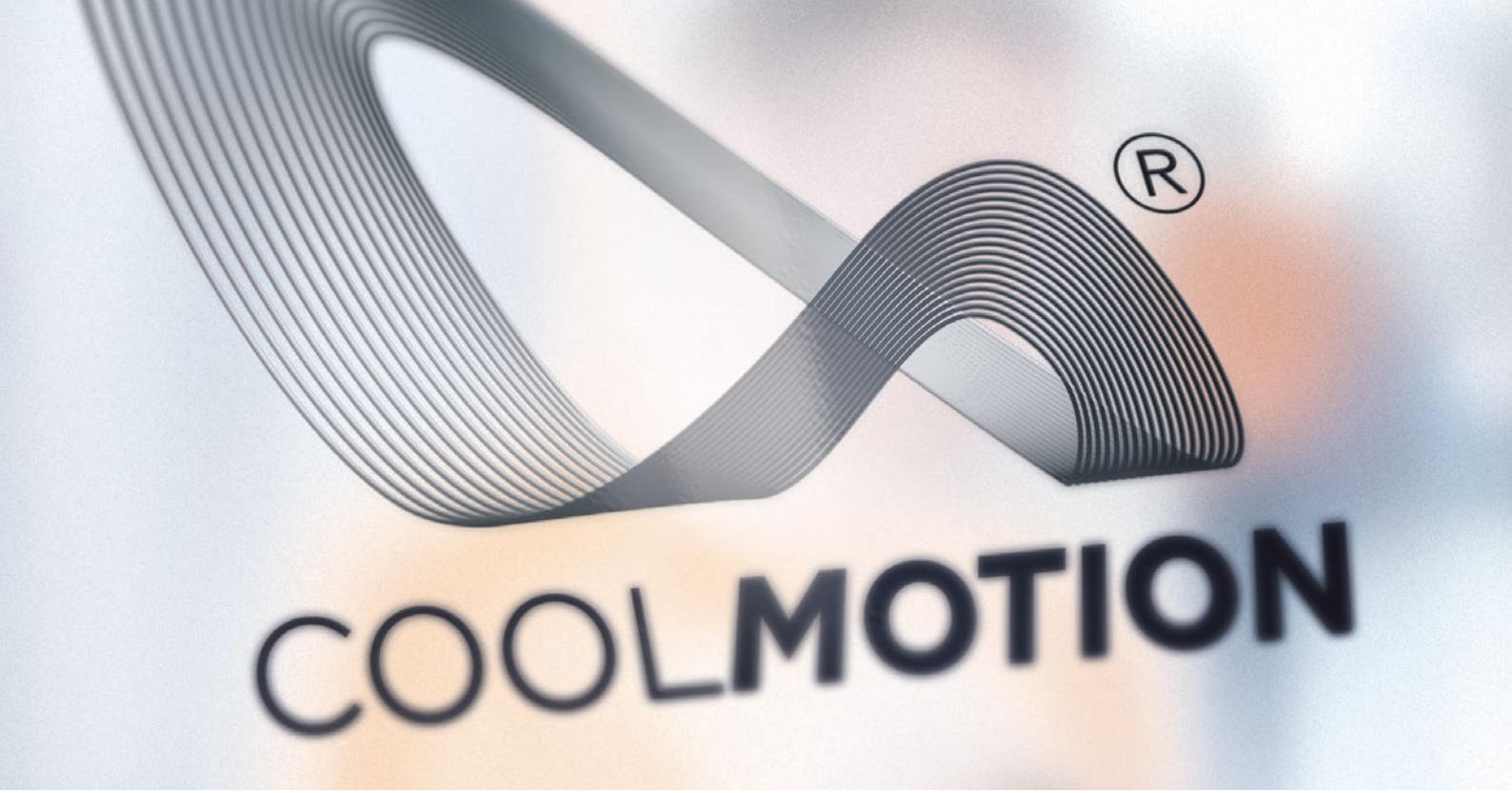

KESSLER COOL*MOTION*®

COOL*MOTION*® for the H *line*

- achieves a **very high torque density**
- achieves **very short acceleration times**
- **performance-enhanced motors enable a compact design**

KESSLER is the innovation engine behind state-of-the-art direct drive technology and is renowned for powerful and energy-efficient motors with high torque density and top reliability even in high-demand applications. Practically-based simulations and individual customer calculations are a prerequisite for the development excellence of KESSLER motors.

The inverter-optimized COOL***MOTION***® motors are recognized for their low-loss design and enhanced heat dissipation. Innovative modifications of the motor components have enabled us to reduce the rotor and stator losses by 25 %. Special construction measures have resulted in significantly enhanced heat dissipation.

The COOL***MOTION***® technology optimizes efficiency to a maximum.

COOL***MOTION***®

All information has been carefully compiled and checked. The printed illustrations are of an explanatory nature and may differ from the actual design. Contents may change without prior notice due to the continuous development of our products. Availabilities and delivery times are subject to variability and have to be confirmed in each individual case. Subject to modification. E&OE.
Photos: Schwäbische Werkzeugmaschinen GmbH; © Franz Kessler GmbH, August 2018. Reprinting, even in part, is only permitted with our approval. FK Edition 2018 PK1002-EN-V2.5

KESSLER

Operating Worldwide for our Customers

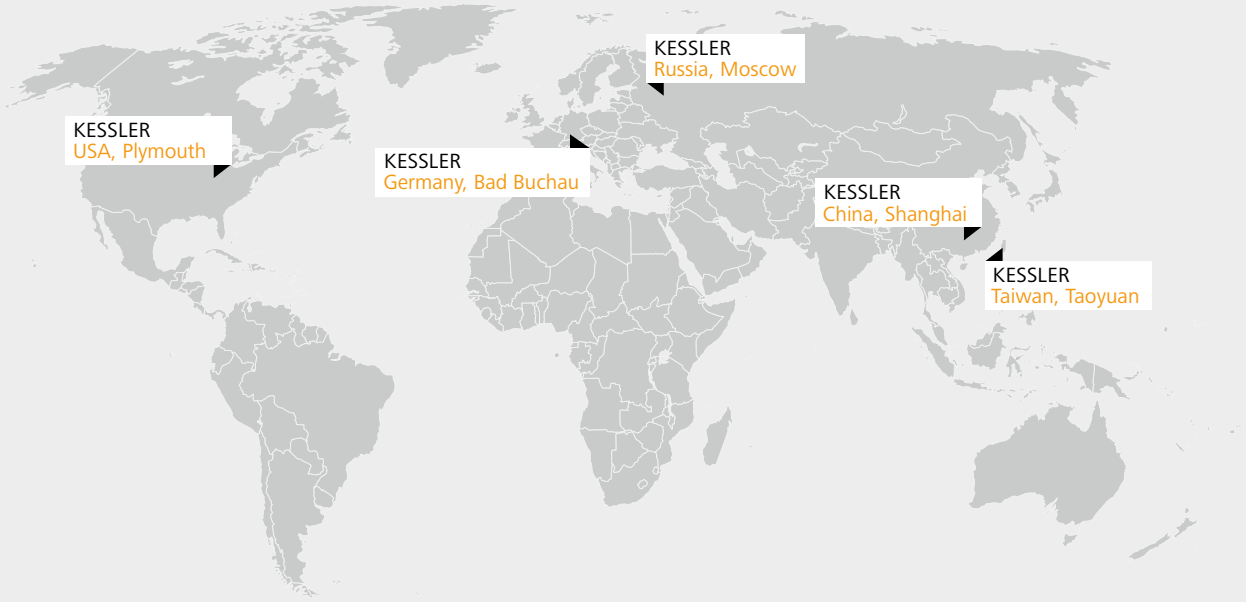

Germany

Franz Kessler GmbH
Franz-Kessler-Straße 2
88422 Bad Buchau, Germany
Tel.: +49 7582 809 - 0
Fax: +49 7582 809 - 170
E-Mail: info@kessler-group.biz

KESSLER energy GmbH
Franz-Kessler-Straße 2
88422 Bad Buchau, Germany
Tel.: +49 7582 809 - 0
Fax: +49 7582 809 - 170
E-Mail: info.energy@kessler-group.biz

USA

KESSLER USA Inc.
44099 Plymouth Oaks Blvd.
Plymouth, MI 48170, USA
Tel.: +1 734 404 0152
Fax: +1 734 404 0153
E-Mail: info.usa@kessler-group.biz

Taiwan

KESSLER Taiwan Co., Ltd.
2F, No.315, Sec 1
Minsheng N. Rd
Guishan Township
Taoyuan County 333
Taiwan (R.O.C.)
Tel.: +88 63 326 2256
Fax: +88 63 355 5014
E-Mail: info.tw@kessler-group.biz

China

KESSLER (Shanghai)
Spindle Service Co., Ltd.
Building #12
No.318 Yuanshan Rd
Minhang District
201108 Shanghai, China
Tel.: +86 21 6489 7034
Fax: +86 21 6489 7134
E-Mail: info.cn@kessler-group.biz

Russia

KESSLER East Ltd.
Dorogobuzhskaja str., 14, bld. 6
121354, Moscow, Russia
Tel.: +7 495 204 2450
E-Mail: info.ru@kessler-group.biz

SPINDLE TECHNOLOGY I SYSTEM TECHNOLOGY I DRIVE TECHNOLOGY I SERVICE SOLUTIONS

www.kessler-group.biz