THRIGE ELECTRIC

DC motors, LAK 2080-2132

Catalogue 2001/04 E

LAK 0.5-20 kW

- 4-75 Nm
- Centre heights 80, 100, 112, 132
- 2 poles
- Fully laminated
- Windings: Shunt, compound, series
- Standards IEC, VDE, BS, NEMA, CSA

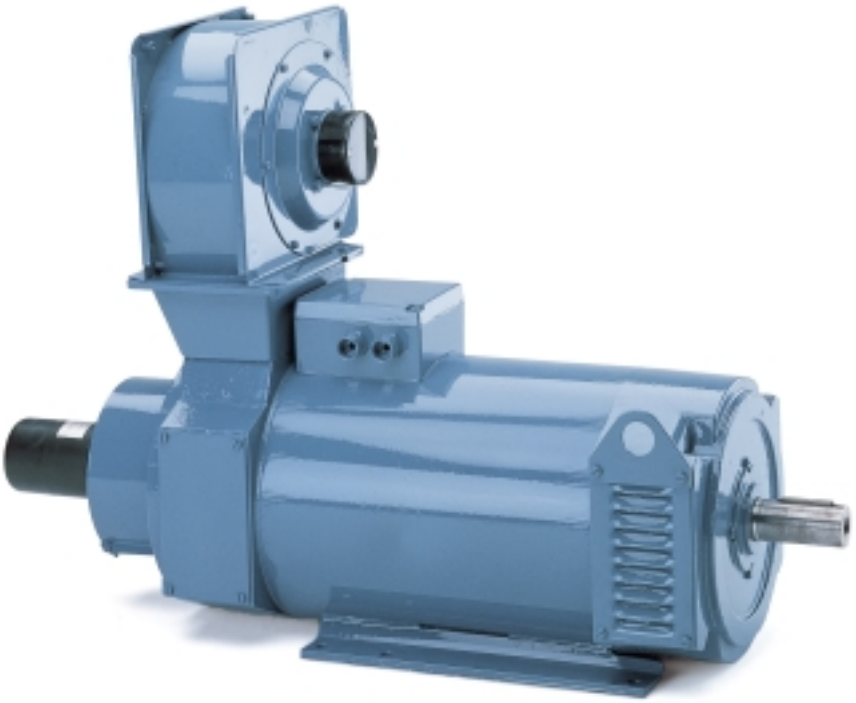

List of contents

Introduction ..... p. 4

Options ..... p. 5

Application data ..... p. 6

Bearing data ..... p. 7

Output data ..... p. 8

Dimension drawing IC06 ..... p. 21

Dimension drawing IC17/37 ..... p. 23

Dimensions, flange ..... p. 24

Introduction

LAK 2080-2132 d.c. motors are fully laminated, 2 pole design.

Output: 0.5-20 kW
Torque: 4-75 Nm

The LAK programme comprises:

Frame size	Core lengths
2080	A, B, C
2100	A, B, C
2112	A, B, C
2132	A, B, C

Type designation example - LAK 2112B:

LAK	=	Type of motor
2	=	Number of poles
112	=	Centre height
B	=	Core length

Basic design characteristics

- Fully laminated stator, main poles and interpoles.
- Low induced voltage due to well proportioned ratio between length and diameter of armature.
- Low bar to bar voltage ensures good commutation.
- Large thermal masses (copper and steel weight) give high thermal time constant.
- Well designed end frames and louvres ensure easy inspection and reduce noise.
- NDE spigots and stub shafts as standard to accept adaptors for all well known makes of tachometers and pulse generators.
- High efficiency through low field losses and well proportioned airgap between armature and stator.
- Minimal brush and commutator wear due to good commutation. 1-phase thyristor supply without external inductance saves price and space.
- Excellent short time overload characteristics which allow choice of smaller motor in many cases.
- Designed for high armature voltages as standard.
- High mechanical and electrical flexibility.
- Painting with excellent corrosion resistant properties.
- Conforms with IEC, BS and VDE standards.
- Available according to NEMA.
- Available CSA approved.

Options

Frame size	LAK	2080	2100	2112	2132
Windings					
Shunt		o	o	o	o
Series		o	o	o	o
Compound		o	o	o	o
Generator		o	o	o	o
Mounting forms					
IM1001	Horizontal foot	o	o	o	o
IM2001	Horizontal foot and flange	o	o	o	o
IM1002	Horizontal foot, two shaft ends	o	o	o	o
IM3001	Horizontal flange	o	o	o	o
IM3601	Horizontal flange, tapped holes	o	o	o	o
Cooling forms					
IC06 (IP23)	Force ventilated	o	o	o	o
IC17 (IP23)	Single pipe ventilated	o	o	o	o
IC01 (IP23)	Self ventilated	o	o	o	o
IC37 (IP54)	Double pipe ventilated	o	o	o	o
IC410 (IP54)	Totally enclosed	o	o	o	o
IC416 (IP54)	Totally enclosed, fan cooled	o	o	o	o
Protection					
IP55		o	o	o	o
Modifications and accessories					
Filter		o	o	o	o
Thermistor		o	o	o	o
Thermal relay		o	o	o	o
Pressure switch				o	o
Special shaft		o	o	o	o
Oil seal, d-end		o	o	o	o
Terminal box on side		o	o	o	o
Special paint		o	o	o	o
Roller bearing, d-end		o	o	o	o
Special balance, class R		o	o	o	o
Heating element				o	o
Brake		o	o	o	o
Gearbox		o	o	o	o
Tachos with coupling					
REO 444R (60V/1000min^{-1})		o	o	o	o
TDP 0.2 T-4 (60V/1000min^{-1})		o	o	o	o
REO 444N (60V/1000min^{-1})		o	o	o	o
others on request					
Pulse generators					
OG 9D (1-1250 ppr)		o	o	o	o
OG 8D (100-2048 ppr)		o	o	o	o
ITD 40 (1024 ppr)		o	o	o	o
others on request					

Application data

Standards
IEC 34 – IEC 72
VDE 0530 – BS 4999

Insulation
Class F

Balance
IEC 34-14 grade 'N'.
Grade 'R' on request.

Temperature rise
Class F, 105°C by resistance.

Overload capacity
1.6 x FLT for 15 seconds every 5 minutes.
2.0 x nom. armature current for 30 seconds every 15 minutes

Terminal box position
Standard: top mounting.
Side-mounting on request.

Blower position
LAK 2080 and 2100:
On either side of the motor.
LAK 2112 and 2132:
On top or either side of the motor.

Bearings
Sealed-for-life preloaded ball bearings.

Armature voltages
Available up to:
LAK 2080-2100: 470 V
LAK 2112-2132: 570 V

Mechanical data

Frame	Inertia J - kgm²	Max. mechanical speed (min-¹)
LAK 2080A	0.0025	6500
LAK 2080B	0.0029	6500
LAK 2080C	0.0038	6500
LAK 2100A	0.0080	6000
LAK 2100B	0.0105	6000
LAK 2100C	0.0140	6000
LAK 2112A	0.0153	5500
LAK 2112B	0.0223	5500
LAK 2112C	0.0262	5500
LAK 2132A	0.0350	5000
LAK 2132B	0.0414	4500
LAK 2132C	0.0575	4500

Cooling data

Frame	IC06/17/37		IC416	
	Air volume m³/h	Pressure drop in motor n/m²	Air volume m³/h	Pressure drop n/m²
LAK 2080	30	100	45	85
LAK 2100	120	250	70	85
LAK 2112	200	650	150	175
LAK 2132	300	625	175	175

Blower motor data

Frame	IC06		
	Blower type	Electric supply	F.L.C (A)
LAK 2080	I	1x220-240V 50Hz	0.18
LAK 2100	II/III	1x220-240V 50Hz 1x220-240V 50Hz 3x380-420V 50-60Hz	0.35 0.42 0.12
LAK 2112 LAK 2132	V	3x380-420V 50 Hz 3x440-500V 60 Hz	0.65 0.65

Frame	IC416		
	Blower type	Electric supply	F.L.C (A)
LAK 2080	I	1x220-240V 50Hz	0.18
LAK 2100 LAK 2112 LAK 2132	II/III	1x220-240V 50Hz 1x220-240V 50Hz 3x380-420V 50-60Hz	0.35 0.42 0.12

Bearing data

Max. radial forces - ball/roller bearings (horizontal shaft - operating life 20,000/50,000 hours)

Frame	Dist. from shaft shoulder (mm)	Max. axial force F in Newton								
		Ball bearings								Roller bearings
		630 min^{-1}	800 min^{-1}	1000 min^{-1}	1250 min^{-1}	1600 min^{-1}	2000 min^{-1}	2500 min^{-1}	3200 min^{-1}	630-3200 min^{-1}
LAK 2080	20	1290	1200	1110	1020	950	840	770	750	1520
	40	760	760	760	760	760	760	760	710	760
LAK 2100	25	1800	1660	1540	1420	1310	1210	1120	1030	2240
	50	1215	1215	1215	1215	1215	1140	1040	970	1215
LAK 2112	30	2360	2180	2020	1860	1720	1590	1460	1350	3220
	60	1610	1610	1610	1610	1610	1480	1360	1260	1610
LAK 2132	40	3750	3470	3220	2960	2740	2530	2330	2160	3970
	80	2540	2540	2540	2540	2540	2360	2150	2000	2540

Max. radial forces - ball bearings (vertical shaft - operating life 20,000 hours)

Frame	Max. axial force F in Newton							
	Ball bearings							
	630 min^{-1}	800 min^{-1}	1000 min^{-1}	1250 min^{-1}	1600 min^{-1}	2000 min^{-1}	2500 min^{-1}	3200 min^{-1}
LAK 2080A	550	500	465	420	390	365	330	300
LAK 2080B	540	490	455	410	380	355	320	290
LAK 2080C	520	470	435	390	360	335	300	270
LAK 2100A	700	645	590	530	500	460	410	375
LAK 2100B	680	625	570	510	480	440	390	355
LAK 2100C	645	590	535	475	445	405	355	320
LAK 2112A	745	685	620	560	520	475	425	390
LAK 2112B	695	635	570	510	470	425	375	340
LAK 2112C	665	605	540	480	440	395	345	310
LAK 2132A	1380	1270	1150	1040	970	880	800	730
LAK 2132B	1320	1210	1090	980	910	820	740	670
LAK 2132C	1260	1150	1030	920	850	760	680	610

Bearing types

Frame	Commutator end	Drive end	
	Ball bearing	Ball bearing	Roller bearing
LAK 2080	6203-2Z/C3	6205-2Z/C3	NU 205-EC-C3
LAK 2100	6204-2Z/C3	6206-2Z/C3	NU 207-EC-C3
LAK 2112	6205-2Z/C3	6207-2Z/C3	NU 207-EC-C3
LAK 2132	6207-2Z/C3	6308-2Z/C3	NU 308-EC-C3

Output data

Select motor frame size against voltage, output and speed. For intermediate output, take the nearest higher output listed under the next frame size. For intermediate speed take the next lower speed listed within the output required.

Each motor winding is defined by a code number shown in the output data lists:
Example:
LAK2112B
4.95 kW - 1510 min^{-1} - 440V
Code number = 3421-1250

The output lists are based on:

- **Cooling forms IC06/IC17/IC37.**
- **The armature circuit resistance is for duty warm condition.**
- **The inductance listed is for the armature circuit.**
- **Motor supply from:**

400V-440V-460V:
3-phase fully controlled thyristor supply.

180V-310V:
1-phase half controlled thyristor supply.

Constant power / constant torque
The full field or base speed is listed for each winding. Constant power is available from this speed if required. Armature voltage: for +/- 10% the output and speed is proportional to the voltage. In the case of small motors the same output and speed can often be obtained for different voltages.

Duty cycles
Ratings: All outputs are duty type S 1. For other ratings or special duty cycles, refer to our sales office.
All outputs are based on use without external inductance.

Windings
All motors in the output lists are shunt wound.
Compound or series winding motor data on request.
Other shunt winding motor data available on request.

Armature voltage
Other armature voltages, and motor data on request.

Ambient temperature and altitude
Outputs in this catalogue are based on max. 40°C ambient temperature and max. 1000m a.s.l.
If higher derate and select from the output lists.

Temperature	+5°C	+10°C	+15°C	+20°C
Cat. output	0.97	0.93	0.89	0.85

Altitude	2000m	3000m	4000m
Cat. output	0.94	0.87	0.77

NEMA
Motor data and dimensions on request (NEMA catalogue).

IC01/410/416
Motor data on request.

Cont. output (kW)	Base speed (min^{-1}) at armature voltage (V) 180	310	400	440	460	Rated armature current (A)	Torque (Nm)	Max. electrical speed** min^{-1}	Efficiency (%)	Armature circuit Resist-ance (Ohm)	Induc-tance (mH)	Code number 3211
0.36		910				1.9	3.8	2500	61.8	47.5	295	3774
0.55			1150			2.1	4.6	2500	64.2	47.5	295	3774
0.64				1250		2.2	4.9	2500	65.1	47.5	295	3774
0.68					1310	2.2	5.0	2500	66.6	47.5	295	3774
0.40		1080				1.9	3.6	2600	68.4	36.0	207	3264
0.65			1340			2.4	4.6	2600	68.5	36.0	207	3264
0.77				1510		2.5	4.9	2600	68.6	36.0	207	3264
0.82					1540	2.6	5.1	2600	69.1	36.0	207	3264
0.52		1210				2.5	4.1	3300	68.3	28.0	149	2856
0.76			1580			2.6	4.6	3300	72.0	28.0	149	2856
0.90				1750		2.8	4.9	3300	72.0	28.0	149	2856
0.97					1800	2.9	5.2	3300	72.0	28.0	149	2856
0.03	855					3.1	3.8	2200	61.0	18.5	105	2346
0.70		1490				3.1	5.0	3200	72.1	18.5	105	2346
1.04			1980			3.5	5.0	3800	74.6	18.5	105	2346
1.18				2250		3.5	5.0	3800	76.1	18.5	105	2346
1.28					2360	3.7	5.2	3800	76.1	18.5	105	2346
0.40	1085					3.5	3.6	2400	62.8	13.0	67.0	1938
0.88		1870				3.8	4.5	3800	75.0	13.0	67.0	1938
1.30			2480			4.2	5.0	4100	77.5	13.0	67.0	1938
1.45				2800		4.2	5.0	4100	79.5	13.0	67.0	1938
1.53					2940	4.2	5.0	4100	79.5	13.0	67.0	1938
0.49	1360					4.1	3.5	4300	66.0	9.8	50.0	1666
1.06		2300				4.5	4.4	4800	76.4	9.8	50.0	1666
1.52			2960			4.8	4.9	5100	79.3	9.8	50.0	1666
1.65				3350		4.7	4.7	5200	80.6	9.8	50.0	1666
1.75					3520	4.7	4.8	5200	80.8	9.8	50.0	1666
0.63	1440					4.8	4.2	4000	73.2	6.5	39.0	1394
1.20		2900				4.8	4.0	5300	81.0	6.5	39.0	1394
1.60			3910			4.9	3.9	5500	82.0	6.5	39.0	1394
1.80				4350		5.0	4.0	5500	81.4	6.5	39.0	1394
0.90	2130					6.4	4.0	4200	78.2	3.4	18.2	1020
1.65		4000				6.5	4.0	5500	82.0	3.4	18.2	1020

**Through field control with constant output. Please specify.

Field loss (hot) = 140 W

Data subject to change without prior notice.

Cont. output (kW)	Base speed (min^{-1}) at armature voltage (V) 180	310	400	440	460	Rated armature current (A)	Torque (Nm)	Max. electrical speed** min^{-1}	Efficiency (%)	Armature circuit Resist-ance (Ohm)	Induc-tance (mH)	Code number 3221
0.40			850			1.48	4.7	1700	70.1	58.0	380	3774
0.50				940		1.60	5.0	1900	70.4	58.0	380	3774
0.54					980	1.66	5.3	2000	70.6	58.0	380	3774
0.54			980			1.90	5.2	2000	70.2	44.0	287	3264
0.65				1080		2.10	5.7	2100	69.8	44.0	287	3264
0.70					1130	2.20	5.9	2200	70.1	44.0	287	3264
0.40		880				1.80	4.4	1700	70.8	34.0	214	2856
0.67			1130			2.40	5.7	2300	70.7	34.0	214	2856
0.80				1250		2.60	6.1	2500	70.6	34.0	214	2856
0.86					1310	2.60	6.3	2600	70.8	34.0	214	2856
0.61		1090				2.70	5.4	2100	71.6	22.4	153	2346
0.90			1460			3.00	5.9	3300	74.8	22.4	153	2346
1.03				1640		3.10	6.0	3300	76.1	22.4	153	2346
1.12					1730	3.20	6.2	3600	76.0	22.4	153	2346
0.82		1330				3.60	5.9	1900	72.5	15.6	105	1938
1.15			1840			3.70	6.0	2600	76.8	15.6	105	1938
1.27				2090		3.70	5.8	2700	78.6	15.6	105	1938
1.38					2180	3.80	6.0	2800	78.5	15.6	105	1938
0.35	900					2.70	3.8	1400	72.0	12.0	72.0	1666
1.00		1580				4.40	6.0	2400	73.9	12.0	72.0	1666
1.35			2210			4.30	5.8	3300	78.6	12.0	72.0	1666
1.50				2480		4.30	5.8	3500	79.8	12.0	72.0	1666
1.61					2600	4.40	5.9	3600	80.1	12.0	72.0	1666
0.58	1050					4.50	5.3	2000	70.9	8.00	54.0	1394
1.25		2050				5.10	5.8	3100	78.7	8.00	54.0	1394
1.65			2760			5.00	5.7	3450	81.8	8.00	54.0	1394
1.80				3100		4.90	5.6	3600	82.8	8.00	54.0	1394
1.90					3220	5.00	5.6	3700	82.9	8.00	54.0	1394
0.94	1510					7.00	6.0	2300	74.6	4.00	29.4	1020
1.72		2950				6.70	5.6	4000	82.2	4.00	29.4	1020
2.22			3900			6.60	5.4	4700	83.6	4.00	29.4	1020
1.10	2030					7.70	5.2	4000	79.2	2.60	18.4	0816
1.90		3800				7.40	4.8	4500	83.2	2.60	18.4	0816

**Through field control with constant output. Please specify.

Field loss (hot) = 140 W

Cont. output (kW)	Base speed (min^{-1}) at armature voltage (V) 180	310	400	440	460	Rated armature current (A)	Torque (Nm)	Max. elec. speed** min^{-1}	Efficiency (%)	Armature circuit Resist-ance (Ohm)	Induc-tance (mH)	Code number 3231
0.65			890			2.4	7.0	1800	67.5	35.0	278	2550
0.75				990		2.5	7.3	2500	69.1	35.0	278	2550
0.79					1060	2.4	7.2	2600	70.9	35.0	279	2550
0.56		780				2.8	6.9	1600	64.8	16.0	214	2244
0.79			1060			2.7	7.2	2500	72.0	16.0	214	1244
0.90				1200		2.8	7.2	2700	73.9	16.0	214	2244
0.96					1260	2.8	7.3	2800	74.4	16.0	214	2244
0.66		915				3.1	6.9	2000	68.6	20.0	160	1938
0.93			1280			3.1	7.0	2600	74.4	20.0	160	1938
1.05				1450		3.1	7.0	3000	76.2	20.0	160	1838
1.10					1520	3.1	7.0	3100	77.0	20.0	160	1838
0.90		1260				3.9	6.8	2800	74.1	13.0	100	1530
1.25			1700			4.0	7.0	3800	77.9	13.0	100	1530
1.39				1910		4.0	7.0	4500	79.1	13.0	100	1530
1.45					2010	4.0	6.9	4500	79.7	13.0	100	1530
0.58	805					5.0	6.9	1900	64.8	8.3	67.0	1258
1.17		1600				4.9	7.0	3300	77.8	8.3	67.0	1258
1.57			2180			4.9	6.9	4300	80.6	8.3	67.0	1258
1.74				2430		4.9	6.9	4600	81.3	8.3	67.0	1258
1.83					2510	4.9	7.0	4800	81.5	8.3	67.0	1258
0.77	1060					6.0	7.0	2700	71.8	5.3	46.0	1020
1.49		2060				6.0	7.0	4200	80.3	5.3	46.0	1020
1.94			2790			5.9	6.7	5800	82.6	5.3	46.0	1020
2.18				3040		6.0	6.9	6000	82.7	5.3	46.0	1020
2.25					3240	5.9	6.6	6000	82.9	5.3	46.0	1020
1.16	1550					8.4	7.2	5300	77.0	2.7	23.6	0748
2.15		2970				8.4	7.0	6000	82.5	2.7	23.6	0748

** Through field control with constant torque. Please specify.

Field loss (hot) = 140 W

Data subject to change without prior notice.

Cont. output (kW)	Base speed (min^{-1}) at armature voltage (V) 180	310	400	440	460	Rated armature current (A)	Torque (Nm)	Max. electrical speed** min^{-1}	Efficiency (%)	Armature circuit Resist-ance (Ohm)	Induc-tance (mH)	Code Number 3311
0.97			830			3.6	11.2	2000	66.9	26.00	238	3358
1.12				910		3.7	11.8	2000	68.3	26.00	238	3358
1.18					950	3.7	11.9	2000	70.0	26.00	238	3358
0.86		790				4.1	10.4	2500	60.4	18.00	157	2760
1.27			1000			4.5	12.1	2600	70.1	18.00	157	2760
1.40				1200		4.3	11.2	2700	74.6	18.00	157	2760
1.46					1250	4.2	11.2	2900	75.8	18.00	157	2760
1.12		940				5.2	11.4	3000	69.1	13.00	109	2346
1.57			1290			5.2	11.7	3000	74.9	13.00	109	2346
1.80				1420		5.4	12.2	3000	75.9	13.00	109	2346
1.90					1470	5.4	12.4	3000	76.5	13.00	109	2346
1.31		1100				5.9	11.4	3500	72.0	12.00	79.0	2025
1.84			1520			6.0	11.6	3700	76.8	12.00	79.0	2025
2.07				1670		6.0	11.9	3700	78.1	12.00	79.0	2025
2.20					1740	6.1	12.1	3700	78.4	12.00	79.0	2025
1.50		1280				6.5	11.2	4000	74.8	8.00	66.0	1840
2.10			1710			6.7	11.8	4000	78.6	8.00	66.0	1840
2.35				1890		6.7	12.0	4000	79.9	8.00	66.0	1840
2.50					1960	6.8	12.2	4000	80.2	8.00	66.0	1840
0.89	830					7.0	10.3	4000	70.5	5.30	46.0	1518
1.96		1620				8.1	11.6	4200	78.2	5.30	46.0	1518
2.70			2130			8.3	12.2	4600	81.4	5.30	46.0	1518
3.02				2360		8.3	12.3	4600	82.6	5.30	46.0	1518
3.20					2470	8.4	12.4	4600	83.0	5.30	46.0	1518
1.15	1100					8.4	10.0	5500	76.0	3.40	30.0	1242
2.47		2020				9.8	11.7	5500	81.5	3.40	30.0	1242
3.35			2670			9.9	12.0	5500	84.4	3.40	30.0	1242
3.75				2970		10.0	12.1	5500	85.2	3.40	30.0	1242
4.00					3100	10.4	12.4	5500	85.3	3.40	30.0	1242
1.85	1500					13.3	11.8	5500	77.0	1.90	15.4	0920
3.30		2820				12.5	11.2	5500	84.9	1.90	15.4	0920
4.45			3730			12.9	11.4	5500	86.1	1.90	15.4	0920
4.80				4100		12.6	11.2	5500	86.2	1.90	15.4	0920
5.00					4280	12.6	11.2	5500	86.3	1.90	15.4	0920
2.50	2040					17.4	11.7	5500	80.0	1.10	8.32	0690
4.50		3750				17.0	11.5	5500	85.3	1.10	8.32	0690
3.00	2740					19.8	10.5	5500	84.1	1.00	6.20	0552

**Through field control with constant output. Please specify.

Field loss (hot) = 225 W

Data subject to change without prior notice.

Cont. output (kW)	Base speed (min^{-1}) at armature voltage (V) 180	310	400	440	460	Rated armature current (A)	Torque (Nm)	Max. electrical speed** min^{-1}	Efficiency (%)	Armature circuit Resist-ance (Ohm)	Induc-tance (mH)	Code number 3321
1.13			740			4.2	14.6	1900	67.5	22.00	241	2760
1.27				835		4.0	14.5	2000	71.3	22.00	241	2760
1.35					870	4.1	14.8	2000	72.0	22.00	241	2760
1.42			900			4.9	15.1	2300	71.9	15.00	182	2346
1.65				1000		9.0	15.8	2300	72.5	15.00	182	2346
1.73					1070	5.1	15.5	2300	74.3	15.00	182	2346
1.18		780				5.5	14.5	2400	68.7	12.00	132	2024
1.67			1070			5.6	15.0	2500	74.3	12.00	132	2024
1.90				1210		5.7	15.0	2500	76.0	12.00	132	2024
2.02					1270	5.7	15.2	2500	76.6	12.00	132	2024
1.37		870				6.2	15.0	2800	71.1	9.00	108	1840
1.92			1220			6.3	15.0	2900	76.5	9.00	108	1840
2.15				1380		6.2	14.9	3000	78.4	9.00	108	1840
2.25					1450	6.2	14.9	3000	79.3	9.00	108	1840
1.80		1140				7.7	15.1	3800	75.7	6.45	73.0	1518
2.50			1520			7.9	15.7	3800	79.5	6.45	73.0	1518
2.70				1730		7.5	14.9	4000	81.8	6.45	73.0	1518
2.85					1820	7.5	15.0	4000	82.4	6.45	73.0	1518
2.35		1460				9.5	15.4	4500	79.5	4.20	50.0	1242
3.20			2010			9.6	15.2	4500	83.3	4.20	50.0	1242
3.50				2190		9.4	15.3	4500	84.5	4.20	50.0	1242
3.70					2300	9.5	15.4	4500	84.9	4.20	50.0	1242
1.70	1100					12.5	14.8	2800	75.4	2.30	26.0	0920
3.55		1970				14.1	17.2	4500	81.4	2.30	26.0	0920
4.35			2730			12.6	15.3	5500	86.3	2.30	26.0	0920
4.90				3000		12.8	15.6	5500	86.7	2.30	26.0	0920
5.00					3170	12.5	15.1	5500	87.2	2.30	26.0	0920
2.25	1530					15.6	14.1	4500	80.1	1.36	14.4	0690
4.35		2820				16.3	14.8	4500	85.8	1.36	14.4	0690
5.60			3700			16.0	14.5	4500	87.3	1.36	14.4	0690
3.10	1960					21.0	15.1	5000	82.0	0.84	9.5	0552
5.70		3590				21.2	15.2	5000	86.9	0.84	9.5	0552
3.70	3030					23.9	11.7	5500	85.9	0.39	3.8	0368

** Through field control with constant output. Please specify.

Field loss (hot) = 260 W

Data subject to change without prior notice.

Cont. output (kW)	Base speed (min^{-1}) at armature voltage (V) 180	310	400	440	460	Rated armature current (A)	Torque (Nm)	Max. electrical speed** min^{-1}	Efficiency (%)	Armature circuit Resist-ance (Ohm)	Induc-tance (mH)	Code number 3331
1.64				800		5.0	19.6	1900	74.7	15.3	165	2024
1.80					830	5.3	20.7	2000	74.0	15.3	165	2024
1.68			800			5.6	20.0	2000	74.6	12.2	138	1840
1.98				885		6.0	21.4	2150	74.6	12.2	138	1840
2.15					925	6.3	22.2	2250	74.2	12.2	138	1840
2.42			975			8.2	23.7	2200	73.7	8.0	102	1518
2.74				1100		8.2	23.8	2300	75.6	8.0	102	1518
2.90					1170	8.2	23.8	2400	76.5	8.0	102	1518
2.30		915				10.1	24.0	2300	73.1	5.2	68.0	1242
3.21			1270			10.3	24.2	2600	77.9	5.2	68.0	1242
3.60				1420		10.3	24.2	2700	79.6	5.2	68.0	1242
3.75					1500	10.1	23.9	2800	80.6	5.2	68.0	1242
3.22		1350				13.0	22.8	3000	80.0	2.9	36.4	0920
4.40			1820			13.2	23.2	3500	83.2	2.9	36.4	0920
4.80				2020		12.9	22.7	3600	84.5	2.9	36.4	0920
5.10					2130	13.1	22.9	3700	84.9	2.9	36.4	0920
2.10	995					15.1	20.2	1900	77.2	1.7	19.3	0690
4.10		1880				15.8	20.8	3800	83.9	1.7	19.3	0690
5.45			2490			15.8	20.9	4000	86.3	1.7	19.3	0690
6.00				2760		15.7	20.8	4100	87.0	1.7	19.3	0690
6.25					2900	15.6	20.6	4200	87.2	1.7	19.3	0690
2.80	1300					19.4	20.6	2800	80.2	1.06	12.6	0552
5.20		2410				19.5	20.6	3400	86.1	1.06	12.6	0552
6.90			3170			19.7	20.8	4200	87.6	1.06	12.6	0552
7.50				3500		19.4	20.5	4400	87.8	1.06	12.6	0552
8.00					3680	19.8	20.8	4600	88.0	1.06	12.6	0552
4.00	2060					26.2	18.6	3800	84.7	0.49	5.30	0368
5.40		3700				20.2	14.0	4500	86.1	0.49	5.30	0368

**Through field control with constant output. Please specify.

Field loss (hot) = 325 W

Data subject to change without prior notice.

Cont. output (kW)	Base speed (min^{-1}) at armature voltage (V) 180	310	400	440	460	Rated armature current (A)	Torque (Nm)	Max. elec. speed** min^{-1}	Efficiency (%)	Armature circuit Resist-ance (Ohm)	Induc-tance (mH)	Code number 3411
1.70				750		5.8	21.7	1800	66.1	18.0	226	3000
1.82					830	5.9	21.0	2100	67.1	18.0	226	3000
1.60			790			5.8	19.4	2400	69.0	15.3	183	2750
1.80				930		5.7	18.5	2700	72.1	15.3	183	2750
1.90					980	5.6	18.5	3000	73.2	15.3	183	2750
1.80			870			6.6	19.8	1800	68.0	13.4	138	2500
2.05				960		6.6	20.4	2300	70.0	13.4	138	2500
2.20					1000	6.8	21.0	2400	70.0	13.4	138	2500
2.10			975			7.5	20.6	2100	70.1	10.7	108	2250
2.40				1070		7.6	21.4	2400	71.4	10.7	108	2250
2.55					1140	7.7	21.4	2600	72.3	10.7	108	2250
2.45			1100			8.5	21.3	2400	72.1	8.5	84.0	2000
2.80				1240		8.7	21.6	2600	73.4	8.5	84.0	2000
3.00					1300	8.9	22.0	2800	73.5	8.5	84.0	2000
2.10		965				9.4	20.8	2100	71.8	6.2	64.0	1750
3.00			1320			10.0	21.7	2700	75.2	6.2	64.0	1750
3.35				1500		9.9	21.4	3000	77.2	6.2	64.0	1750
3.55					1580	9.9	21.5	3100	77.7	6.2	64.0	1750
2.65		1160				11.7	21.8	2500	73.2	4.5	46.0	1500
3.65			1600			11.7	21.8	3400	77.7	4.5	46.0	1500
4.15				1800		11.9	22.0	3600	78.9	4.5	46.0	1500
4.35					1880	11.9	22.1	3800	79.7	4.5	46.0	1500
1.57	870					12.9	17.3	1800	68.0	3.1	31.0	1250
3.30		1470				13.9	21.5	3200	76.7	3.1	31.0	1250
4.45			1980			13.8	21.5	4200	80.7	3.1	31.0	1250
5.00				2200		13.9	21.7	4400	81.9	3.1	31.0	1250
5.25					2320	13.8	21.6	4500	82.5	3.1	31.0	1250
4.35		1950				17.5	21.3	4100	80.4	2.0	24.0	1000
5.90			2630			17.7	21.4	5000	83.3	2.0	24.0	1000
6.50				2960		17.5	21.0	5000	84.3	2.0	24.0	1000
6.80					3150	17.5	20.6	5000	84.6	2.0	24.0	1000
2.40	1500					18.2	15.3	3600	73.2	1.27	12.9	0800
5.00		2540				19.1	18.8	4600	84.3	1.27	12.9	0800
6.50			3350			19.0	18.6	5000	85.6	1.27	12.9	0800
4.70	2950					30.8	15.2	5000	84.8	0.3	2.9	0400

**Through field control with constant output. Please specify.

Field loss (hot) = 350 W

Data subject to change without prior notice.

Cont. output (kW)	Base speed (min^{-1}) at armature voltage (V) 180	310	400	440	460	Rated armature current (A)	Torque (Nm)	Max. electrical speed** min^{-1}	Efficiency (%)	Armature circuit Resist-ance (Ohm)	Induc-tance (mH)	Code number 3421
2.35					750	7.5	30.0	1900	67.6	13.0	162	2250
2.50			770			9.1	31.0	1600	68.8	9.3	128	1950
2.85				910		9.1	30.0	2000	71.4	9.3	128	1950
3.00					950	8.9	30.0	2100	72.9	9.3	128	1950
2.87			900			10.2	30.5	1800	70.0	7.7	97.0	1750
3.25				990		10.2	31.4	2000	72.3	7.7	97.0	1750
3.42					1050	10.1	31.0	2200	73.7	7.7	97.0	1750
3.50			1070			11.9	31,4	2300	73.8	5.6	70.0	1500
3.90				1220		11.6	30,6	2600	76.4	5.6	70.0	1500
4.15					1280	11.8	31.0	2800	76.7	5.6	70.0	1500
3.20		980				14.4	31.2	2000	71.8	4.0	48.0	1250
4.40			1340			14.3	31.4	2500	77.0	4.0	48.0	1250
4.95				1510		14.3	31.3	2600	78.5	4.0	48.0	1250
5.15					1590	14.1	31.0	2800	79.5	4.0	48.0	1250
2.00	775					17.5	24.7	2600	63.5	2.46	32.0	1000
4.25		1290				17.9	31.0	2600	76.6	2.46	32.0	1000
5.70			1760			17.6	31.0	3200	80.9	2.46	32.0	1000
6.30				1990		17.4	30.3	3400	82.5	2.46	32.0	1000
6.70					2090	17.6	30.6	3600	82.9	2.46	32.0	1000
2.52	965					20.0	25.0	2200	70.2	1.8	22.0	0850
5.00		1620				20.2	29.6	3100	79.8	1.8	22.4	0850
6.70			2160			20.1	30.0	4200	83.2	1.8	22.4	0850
7.50				2400		20.2	30.0	4400	84.2	1.8	22.4	0850
7.85					2500	20.2	30.0	4500	84.6	1.8	22.4	0850
3.45	1300					24.3	26.0	2700	78.8	0.85	11.2	0600
6.50		2420				24.3	25.7	4000	86.2	0.85	11.2	0600
8.50			3250			24.4	25.0	4700	87.2	0.85	11.2	0600
9.30				3600		24.2	24.7	4900	87.2	0.85	11.2	0600
9.70					3770	24.2	24.6	5000	87.2	0.85	11.2	0600
6.30	2850					40.5	21.2	5000	86.3	0.22	2.6	0300

**Through field control with constant output. Please specify.

Field loss (hot) = 370 W

Data subject to change without prior notice.

Cont. output (kW)	Base speed (min^{-1}) at armature voltage (V) 180	310	400	440	460	Rated armature current (A)	Torque (Nm)	Max. electrical speed** min^{-1}	Efficiency (%)	Armature circuit Resist-ance (Ohm)	Induc-tance (mH)	Code number 3431
3.30					770	10.1	41.0	1600	71.2	9.00	145	1700
3.20			750			11.3	40.8	1800	70.9	7.00	106	1500
3.65				850		11.4	41.0	2000	72.9	7.00	106	1500
3.85					890	11.3	41.4	2100	74.0	7.00	106	1500
4.15			915			14.2	43.3	1850	73.1	3.90	74.0	1250
4.70				1060		14.2	42.4	2100	75.2	3.90	74.0	1250
4.90					1110	13.9	42.2	2250	76.7	3.90	74.0	1250
4.00		900				17.7	42.5	1850	73.0	3.10	46.0	1000
5.55			1230			17.9	43.1	2300	77.6	3.10	46.0	1000
6.20				1380		17.8	42.9	2500	79.3	3.10	46.0	1000
6.45					1450	17.5	42.5	2600	80.3	3.10	46.0	1000
3.93	850					30.2	44.2	2600	72.3	1.10	16.8	0600
7.50		1710				29.3	41.9	4000	82.5	1.10	16.8	0600
9.50			2300			27.6	39.5	4700	86.1	1.10	16.8	0600
10.40				2540		27.2	39.0	4900	86.8	1.10	16.8	0600
10.80					2660	26.9	39.0	5000	87.2	1.10	16.8	0600
5.30	1990					39.2	25.5	3500	75.0	0.26	3.4	0300
10.50		3520				39.1	28.5	5000	86.7	0.26	3.4	0300

**Through field control with constant output. Please specify.

Field loss (hot) = 400 W

Cont. output (kW)	Base speed (min^{-1}) at armature voltage (V) 180	310	400	440	460	Rated armature current (A)	Torque (Nm)	Max. electrical speed** min^{-1}	Efficiency (%)	Armature circuit Resist-ance (Ohm)	Induc-tance (mH)	Code number 3511
3.25				765		10.5	40.6	1600	70.6	8.30	173	2320
3.45					820	10.4	40.2	1700	71.9	8.30	173	2320
3.66			840			12.8	41.6	1900	71.4	5.80	114	1914
4.14				950		12.8	41.6	2100	73.8	5.80	114	1914
4.40					1020	12.8	41.4	2200	74.7	5.80	114	1914
3.35		780				15.5	41.0	1650	69.8	4.00	75.0	1566
4.70			1080			15.6	41.8	2400	75.4	4.00	75.0	1566
5.30				1210		15.6	41.8	2600	77.4	4.00	75.0	1566
5.60					1300	15.5	41.3	2700	78.3	4.00	75.0	1566
4.40		1040				18.7	40.4	2000	75.7	2.50	49.0	1276
6.10			1410			19.1	41.3	2600	79.9	2.50	49.0	1276
6.90				1560		19.4	42.3	2800	80.9	2.50	49.0	1276
7.25					1650	19.3	42.1	3000	81.7	2.50	49.0	1276
3.30	775					26.1	40.7	1750	70.2	1.30	26.0	0928
6.60		1530				26.3	41.1	3200	80.9	1.30	26.0	0928
8.90			2030			26.5	41.9	4000	84.0	1.30	26.0	0928
9.70				2260		25.9	41.0	4250	85.2	1.30	26.0	0928
10.40					2380	26.5	41.7	4500	85.3	1.30	26.0	0928
4.31	1535					31.8	26.9	3600	75.3	0.50	10.0	0580
9.00		2590				33.3	33.3	4100	87.0	0.05	10.0	0580
12.50			3450			35.7	34.6	4200	87.1	0.50	10.0	0580
14.00				3850		36.4	34.7	4400	87.1	0.50	10.0	0580
14.60					4000	36.4	34.9	4500	87.1	0.50	10.0	0580
9.80	3010					62.8	31.1	4500	86.7	0.13	2.30	0290

**Through field control with constant output. Please specify.

Field loss (hot) = 495 W

Data subject to change without prior notice.

Cont. output (kW)	Base speed (min^{-1}) at armature voltage (V) 180	310	400	440	460	Rated armature current (A)	Torque (Nm)	Max. elec. speed** min^{-1}	Efficiency (%)	Armature circuit Resist-ance (Ohm)	Induc-tance (mH)	Code number 3521
5.10					760	14.9	64.1	1900	74.4	5.00	96.0	1566
5.60			825			18.4	64.8	1800	76.0	3.30	63.0	1275
6.25				935		18.2	63.9	2000	78.1	3.30	63.0	1275
6.60					985	18.2	64.0	2000	78.8	3.30	63.0	1275
5.90		840				24.8	67.1	1750	76.7	1.80	38.0	0986
7.95			1150			24.5	66.3	2350	81.1	1.80	38.0	0986
8.80				1290		24.2	65.4	2500	82.7	1.80	38.0	0986
9.30					1360	24.3	65.6	2600	83.2	1.80	38.0	0986
6.70		985				27.2	65.0	2100	79.4	1.43	30.0	0870
9.15			1330			27.6	65.7	2800	82.8	1.43	30.0	0870
10.0				1500		27.0	63.9	3200	84.3	1.43	30.0	0870
10.6					1570	27.2	64.5	3300	84.7	1.43	30.0	0870
8.80		1270				34.6	66.2	2600	82.0	0.93	19.7	0696
11.90			1730			35.0	65.9	3500	85.0	0.93	19.7	0696
13.20				1920		34.9	65.7	3800	86.0	0.93	19.7	0696
13.80					2020	34.7	65.3	4000	86.4	0.93	19.7	0696
6.40	930					45.9	65.7	2100	77.5	0.53	11.0	0522
12.00		1780				45.5	65.6	3400	85.1	0.53	11.0	0522
16.20			2380			46.4	65.2	3600	87.3	0.53	11.0	0522
17.80				2640		46.0	64.5	3800	88.0	0.53	11.0	0522
18.40					2770	45.3	63.5	4000	88.3	0.53	11.0	0522
9.00	1520					58.8	56.6	2800	85.1	0.22	4.4	0348
15.00		2770				54.7	51.7	3600	88.5	0.22	4.4	0348
18.00			3600			51.2	47.8	4200	86.6	0.22	4.4	0348
20.00				4000		52.4	47.8	4600	86.7	0.22	4.4	0348
21.00					4180	52.9	48.0	4800	86.2	0.22	4.4	0348

**Through field control with constant output. Please specify.

Field loss (hot) = 650 W

Cont. output (kW)	Base speed (min^{-1}) at armature voltage (V) 180	310	400	440	460	Rated armature current (A)	Torque (Nm)	Max. elec. speed** min^{-1}	Efficiency (%)	Armature circuit Resist-ance (Ohm)	Induc-tance (mH)	Code number 3531
5.60				720		16.3	74.3	1800	78.0	3.60	89.00	1218
5.95					760	16.5	74.8	2000	78.6	3.60	89.00	1218
4.70		605				20.1	75.5	1250	75.5	2.35	57.00	0986
6.50			820			20.4	75.7	1700	79.7	2.35	57.00	0986
7.25				920		20.3	75.3	2000	81.3	2.35	57.00	0986
7.65					970	20.3	75.3	2200	81.9	2.35	57.00	0986
6.50		840				26.2	73.9	1650	80.0	1.40	33.00	0754
8.75			1130			26.2	74.3	1900	83.4	1.40	33.00	0754
9.90				1260		26.7	75.0	2200	84.3	1.40	33.00	0754
10.20					1320	26.1	73.8	2400	85.0	1.40	33.00	0754
6.90		920				27.3	71.6	2500	81.7	1.20	28.00	0696
9.40			1240			27.8	72.4	3000	84.6	1.20	28.00	0696
10.30				1380		27.3	71.0	3400	85.6	1.20	28.00	0696
10.80					1450	27.3	71.2	3600	86.0	1.20	28.00	0696
9.50		1290				36.1	70.4	3000	84.8	0.70	16.00	0522
12.70			1700			36.6	71.4	3500	86.8	0.70	16.00	0522
14.00				1910		36.3	70.2	3800	87.7	0.70	16.00	0522
14.80					2000	36.6	70.7	4000	87.9	0.70	16.00	0522
6.88	985					47.1	66.7	2900	81.2	0.45	9.70	0406
12.60		1680				47.2	71.6	3000	86.1	0.45	9.70	0406
16.60			2230			47.2	71.3	3500	87.9	0.45	9.70	0406
17.80				2470		45.7	69.0	3800	88.5	0.45	9.70	0406
19.20					2600	47.1	70.5	4000	88.7	0.45	9.70	0406
8.10	1090					54.2	71.0	2000	83.1	0.30	6.90	0348
14.70		2010				54.0	69.9	3000	87.9	0.30	6.90	0348
19.40			2640			54.5	70.2	3500	89.0	0.30	6.90	0348
21.20				2930		53.9	69.3	3800	89.3	0.30	6.90	0348
22.20					3050	54.1	69.5	4000	89.3	0.30	6.90	0348

**Through field control with constant output. Please specify.

Field loss (hot) = 700 W

Data subject to change without prior notice.

Dimensions in mm

LAK 2080

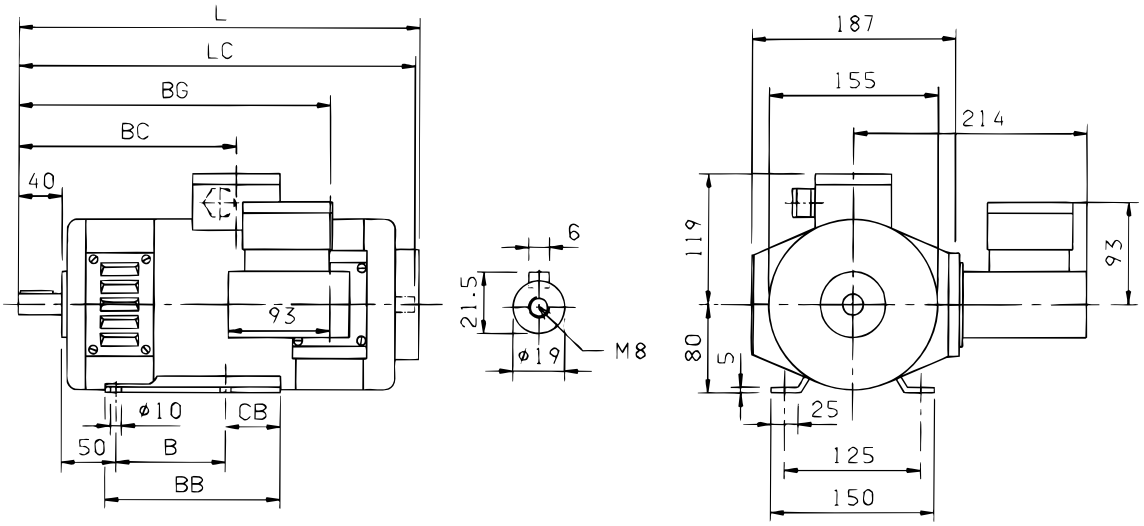

LAK 2100

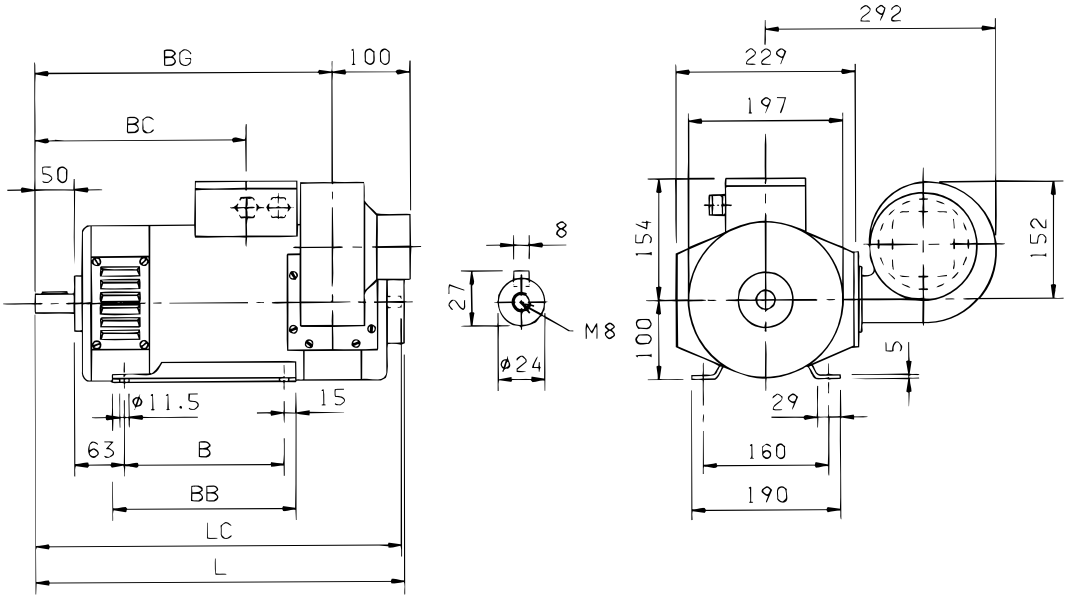

LAK	B	BB	BC	BG	CB	L	LC	L with tacho*	Weight kg
2080A	100	160	199	285	50	367	363	553	23
2080B	100	160	230	316	50	398	394	584	26
2080C	178	198	279	365	10	447	443	633	31
2100A	140	170	228	338	-	430	426	616	40
2100B	203	233	268	378	-	470	466	656	48
2100C	203	233	328	438	-	530	526	716	59

*REO R

Dimensions are not binding

Dimension drawing, LAK 2112-2132 IC06

Dimensions in mm

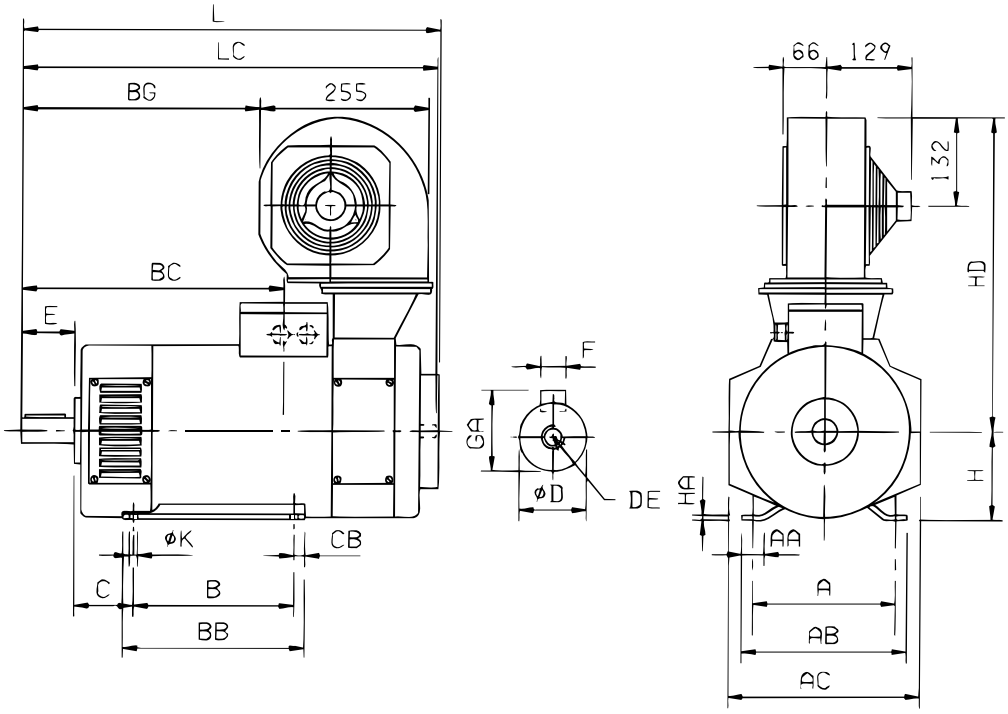

LAK	A	AA	AB	AC	B	BB	BC	BG	CB	D	DE
2112A	190	29	220	253	159	190	265	219	15,5	28	M10
2112B					229	260	313	267			
2112C					229	260	378	332			
2132A	216	34	250	290	178	210	318	276	16	38	M12
2132B					241	273	393	351			
2132C					306	338	459	416			

LAK	E	F	GA	H	HA	HD	K	L	LC	L with tacho*	Weight kg
2112A	60	8	31	112	5	449	12	483	479	669	61
2112B								531	527	710	73
2112C								596	592	782	91
2132A	80	10	41	132	6	464		553	549	735	90
2132B					8			628	624	810	115
2132C					8			693	689	875	140

*REO R

Dimensions are not binding

Dimensions in mm

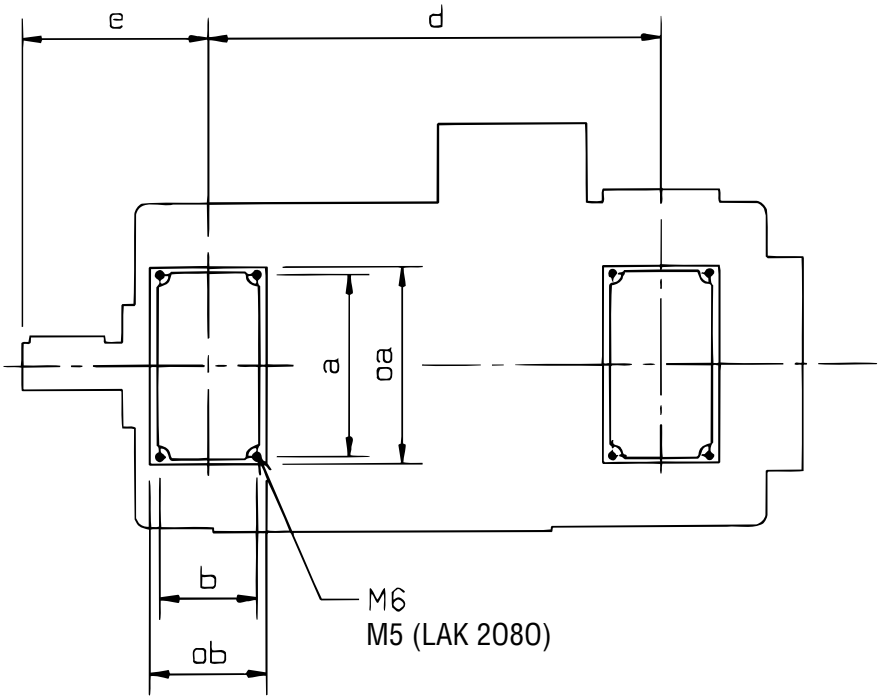

LAK	a	b	d	e	oa	ob
2080A	82	48	192	93	94	62
2080B			223			
2080C			272			
2100A	105	60	230	108	117	74
2100B			270			
2100C			330			
2112A	120	70	258	124	132	86
2112B			306			
2112C			371			
2132A	145	78	290	149	157	94
2132B			365			
2132C			430			

Dimensions are not binding

Dimensions in mm

Drive end (IM 2001/3001)

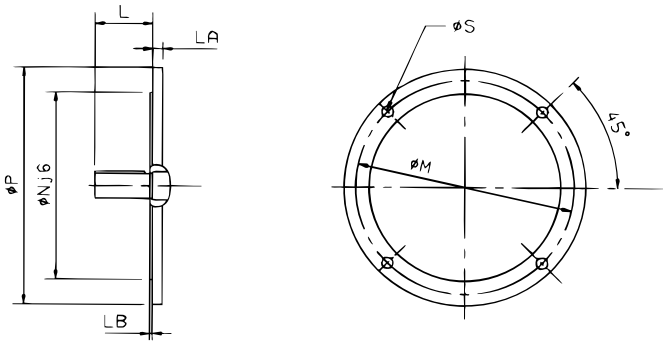

LAK	Flange	L	LA	LB	M	N	P	S
2080	F165	40	10	3.5	165	130	200	12
2100	F215	50	11	4	215	180	250	15
2112	F215	60	11	4	215	180	250	15
2132	F265	80	10	5	265	230	300	19

Non drive end LAK 2080-2100-2112

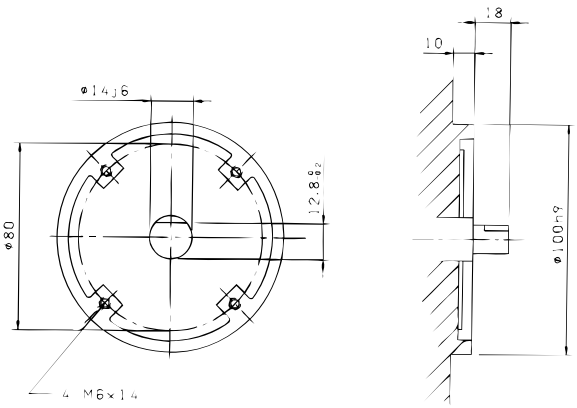

Non drive end LAK 2132

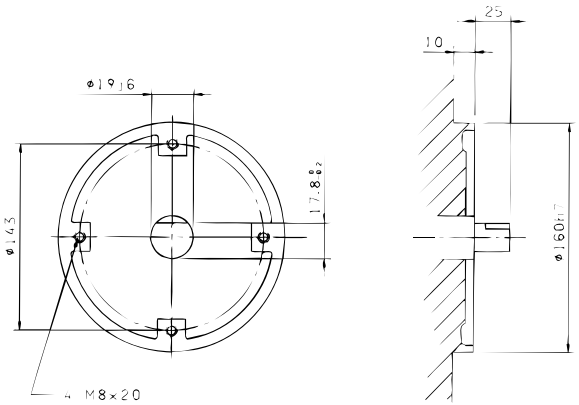

Dimensions are not binding

d.c. motors
- around the world

Industrial applications:

LAK 2000	up to 20 kW
LAK 4000	up to 500 kW
LAKC 4/6/8000	up to 1750 kW

Battery powered vehicles:

TSL motors

Motor-in-wheel drives

a.c. and switched reluctance drive systems

Special products:

For test equipment

Generators/alternators

Customised products

Repair and service

France:
Thrige Electric S.A.
22, rue du 8 Mai 1945
95340 Persan
Tel: 01 30 28 61 00
Fax: 01 34 70 21 79

United Kingdom:
Thrige-Scott Ltd.
7A Waterloo Park
Upper Brook Street
Stockport SK1 3BP
Tel: 0161 480 0037
Fax: 0161 476 4390

Germany:
Thrige Electric GmbH
Industriestrasse 8
92334 Berching
Tel: 08462 204 400
Fax: 08462 204 450

Sweden:
Thrige Electric
Lefflersgatan 1
Box 1641
S-751 46 Uppsala
Tel: 018 65 70 10
Fax: 018 10 74 78

International:
Thrige Electric A/S
Energivej 25
5260 Odense S
Denmark
Tel.: +45 63 95 11 11
Fax: +45 63 95 11 55

BRIX OG BRIX APS / Helmer Jensen Bogtryk/Offset ApS